© 2020 TE Connectivity. All Rights Reserved.

REVISIONS					
P	LTR	DESCRIPTION	DATE	DWN	APVD
	A	RELEASE	13OCT2020	AL	SZ

1. MATERIAL: COPPER ALLOY FOR ROUND SOCKET, SQUARE BODY, AND COMPLIANT PINS.

2. FINISH:
   ROUND SOCKET: 150µIN MIN SILVER OVER 50µIN MIN NICKEL PLATING
   SQUARE BODY: 150µIN MIN NICKLE PLATING
   COMPLIANT PINS: 80µIN MIN TIN OVER 50µIN NICKEL PLATING

3. RECOMMENDED PCB HOLE SPEC:
   DRILLED HOLE: Ø1.15±0.025mm
   FINISHED HOLE: Ø1.02±0.05mm
   COPPER PLATING: 0.03mm MIN PER SURFACE
   TIN PLATING: 0.008mm MIN PER SURFACE

4. ELECTRICAL PERFORMANCE: 300A CURRENT

5. INSTALLATION: APPROX. 230Lbf TO PRESS ASSEMBLY ONTO BOARD

6. RECOMMENDED TORQUE FOR M3 SCREW: 5Kgf*cm

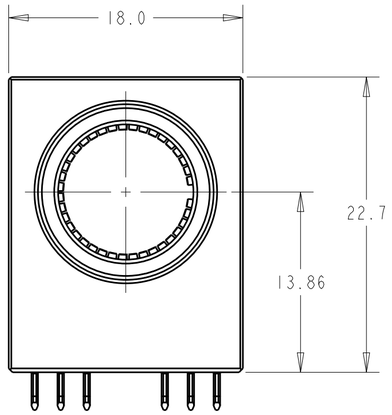

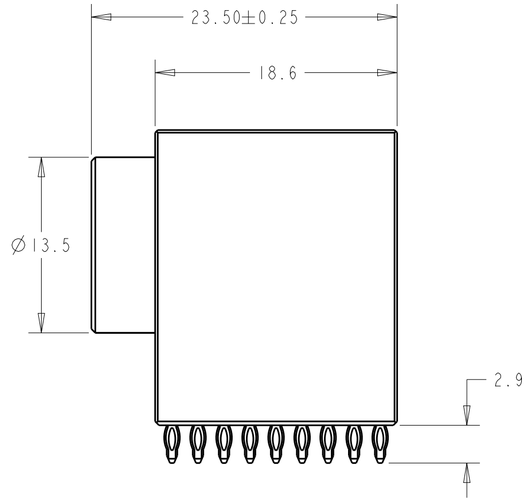

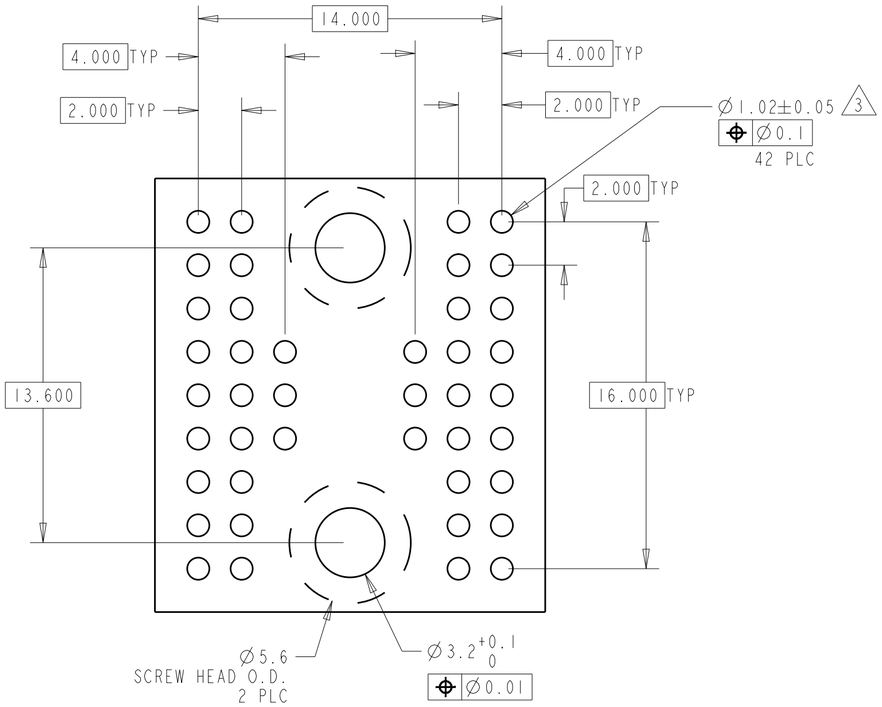

RECOMMENDED PCB LAYOUT
PCB THICKNESS: 2.00mm MIN

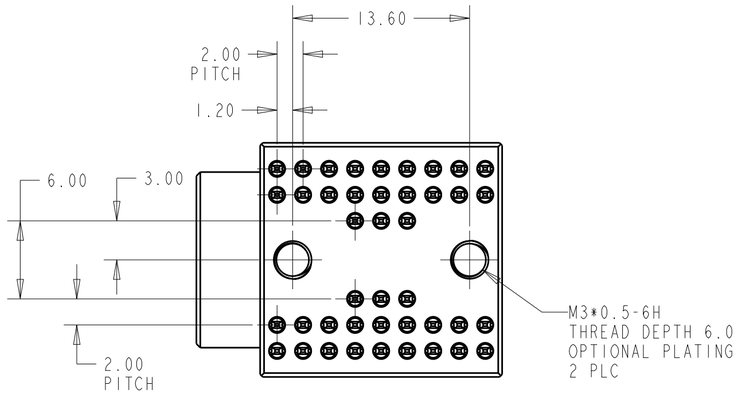

THIS DRAWING IS A CONTROLLED DOCUMENT.		DWN ANDY LI 04JUL2019	TE Connectivity
DIMENSIONS: mm	TOLERANCES UNLESS OTHERWISE SPECIFIED: 0 PLC ±- 1 PLC ±0.3 2 PLC ±0.2 3 PLC ±0.1 4 PLC ±0.0001 ANGLES ±-	CHK -	NAME 10.3MM ICCON BLOCK ROUND SOCKET, RIGHT ANGLE
		APVD SUNY ZHAO 04JUL2019	
		PRODUCT SPEC 108-128111	
		APPLICATION SPEC 114-128112	
MATERIAL SEE NOTE 1 -	FINISH SEE NOTE 2 -	WEIGHT -	SIZE A2 / CAGE CODE 00779 / DRAWING NO C-2358715 / RESTRICTED TO -
		CUSTOMER DRAWING	SCALE 3:1 / SHEET 1 OF 1 / REV A1

2358715-1 PART NUMBER