FRONT VIEW - MALE M12
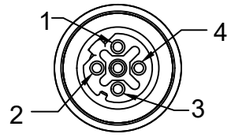
1-WHITE/ORANGE 2-WHITE/GREEN 3-ORANGE 4-GREEN

PART NUMBER LEGEND

E10A00616M020

FINISHED LENGTH
M005 - 0.5 METER
M010 - 1 METER
M200 - 20 METER

MATERIAL NUMBER	ENGINEERING NUMBER	FINISHED LENGTH
1201088542	E10A00616M020	2M [6FT 7 IN]
1201088545	E10A00616M200	20M[65FT 7 IN]
1201088547	E10A00616M500	50M[164FT]

NOTES:

1. MATERIAL: AS NOTED
2. FINISH: AS NOTED
3. ELECTRICAL:
   VOLTAGE: 125V
   CURRENT: 1.5A
4. PROTECTION: IP67 (WHEN MATED)
5. COUPLING THREAD: M12X1
6. ALL DIMENSIONS ARE FOR REFERENCE
   UNLESS TOLERANCED OR NOTED OTHERWISE

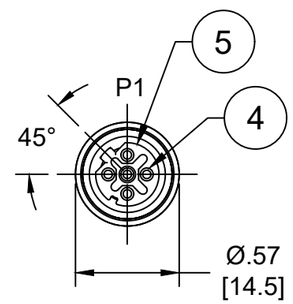

FACE VIEW - MALE

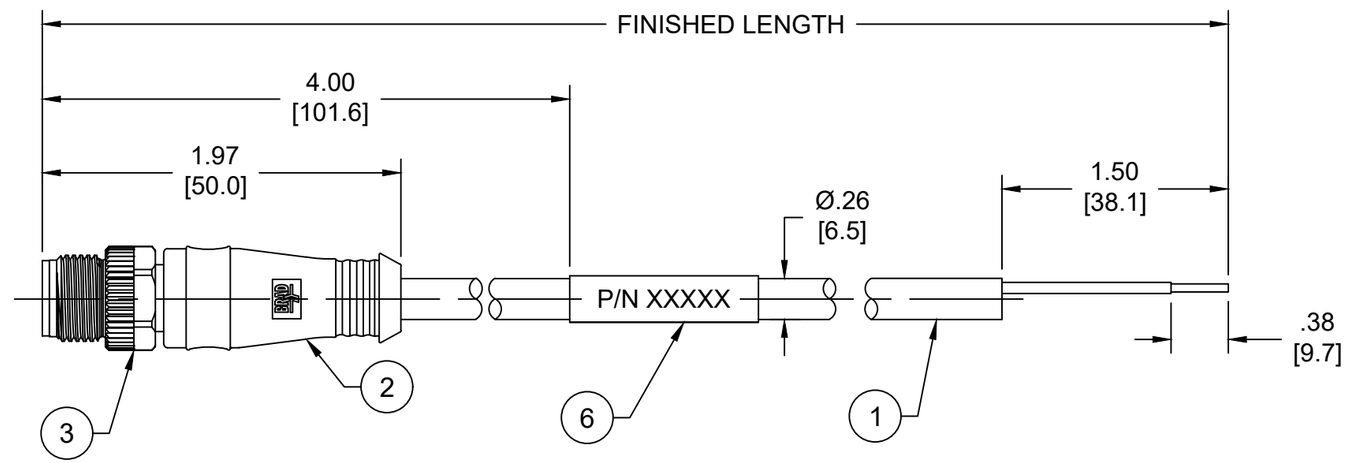

ADDITIONAL CABLE INFORMATION

PHYSICAL CHARACTERISTICS:	
CONDUCTOR SIZE	24AWG 2 PAIR (19/0.12mm) BARE COPPER
INSULATION MATERIAL	POLYOLEFIN
SHIELD/BRAID	TINNED COPPER 85% COVERAGE
JACKET MATERIAL	TPU (TEAL)
CONDUCTOR	ORANGE, ORANGE-WHITE & GREEN, GREEN-WHITE
TAPE	ALUMINUM-POLYESTER

B

CABLE:	
TEMPERATURE RATING (STORAGE)	-40 / +80°C
TEMPERATURE RATING (OPERATION)	-20 / +50°C
WELD SLAG RESISTANCE	YES, S-300 MOLEX TEST
FREE SUBSTANCE'S	FCKW, SILICONE, AND PB
FIRE PERFORMANCE	IEC60332-1, UL1581
OIL RESISTANCE	ISO6722, UL758/2556

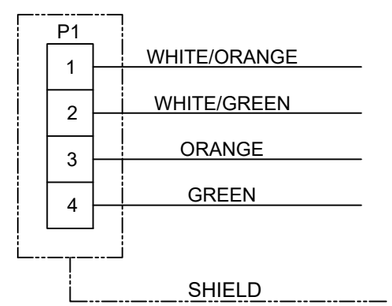

WIRING DIAGRAM

CABLE LENGTH TOLERANCES
<.3M [1FT]: +19mm-0 [+.75in-0]
.3 - .9M [1 - 3FT]: +44.5mm-0 [+1.75in-0]
.9 - 1.8M [3 - 6FT]: +55.6mm-0 [+2.19in-0]
1.8 - 3.7M [6 - 12FT: +88.9mm-0 [+3.50in-0]
3.7 - 7.3M [12 - 24FT]: +165.1mm-0 [+6.50in-0]
7.3-14.6M [24 - 48FT]: +317.5mm-0 [+12.50in-0]
14.6 - 30.5M [48-100FT]: +622.3mm-0 [+24.50in-0]
OVER 30M [100FT] +2% OF FINISHED LENGTH

ITEM	DESCRIPTION	MATERIAL	FINISH
6	WRAP LABEL	VINYL	BLACK/YELLOW
5	INSERT	PUR	BLACK
4	PIN CONTACT	COPPER ALLOY	GOLD OVER NICKEL
3	COUPLING NUT	BRASS	NICKEL PLATED
2	OVERMOLD	PUR	BLACK
1	CABLE #24AWG	TPU	TEAL

B

THIS DRAWING CONTAINS INFORMATION THAT IS PROPRIETARY TO MOLEX ELECTRONIC TECHNOLOGIES, LLC AND SHOULD NOT BE USED WITHOUT WRITTEN PERMISSION

FUNCTIONAL SYMBOLS: FA=0, FC=0, FP=0
DIVISIONAL SYMBOLS

DIMENSION UNITS: INCH/MM
SCALE: NTS

GENERAL TOLERANCES (UNLESS SPECIFIED)

	mm	INCH
4 PLACES	± ----	± ----
3 PLACES	± ----	± ----
2 PLACES	± ----	± ----
1 PLACE	± ----	± ----
0 PLACES	± ----	± ----
ANGULAR TOL ±	---- °	

DRAFT WHERE APPLICABLE MUST REMAIN WITHIN DIMENSIONS

CURRENT REV DESC: ITEM-1 WAS PUR. MODIFIED PN CHART

EC NO: 702709
DRWN: ABENJAMINLW 2022/03/16
CHK'D: RSTONE 2022/04/11
APPR: BWOODMAN 2022/04/16

INITIAL REVISION:
DRWN: RSTONE 2017/08/04
APPR: BWOODMAN 2017/08/11

molex

D-CODE CORDSET, M12
4 POLE, MALE, STRAIGHT, #24 AWG

PRODUCT CUSTOMER DRAWING

DOCUMENT NUMBER	DOC TYPE	DOC PART	REVISION
SD-120108-101	PSD	001	B

THIRD ANGLE PROJECTION | DRAWING: B-SIZE | SERIES: 120108 | MATERIAL NUMBER: SEE CHART | CUSTOMER: GENERAL MARKET | SHEET NUMBER: 1 OF 1

DOCUMENT STATUS	P1	RELEASE DATE	2022/04/16 16:04:48

FORMAT: IN-ACAD-tb-prod-B
REVISION: B
DATE: 2020/01/14