THIS DRAWING IS UNPUBLISHED. RELEASED FOR PUBLICATION - ,- .
© COPYRIGHT - By - ALL RIGHTS RESERVED.

REVISIONS					
P	LTR	DESCRIPTION	DATE	DWN	APVD
	U2	REVISED PER ECR-15-014064	04MAR2016	NK	NL

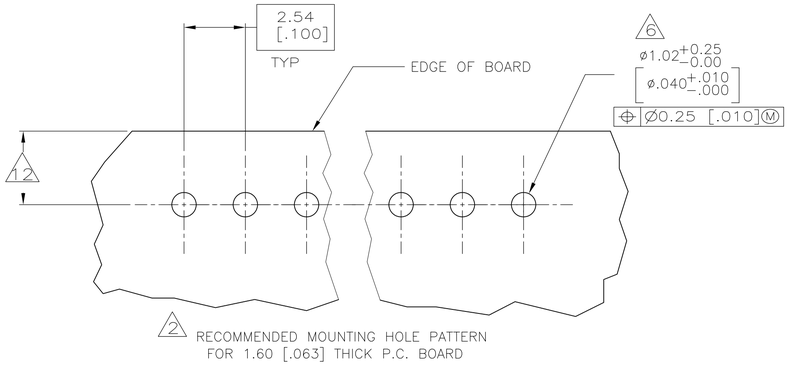

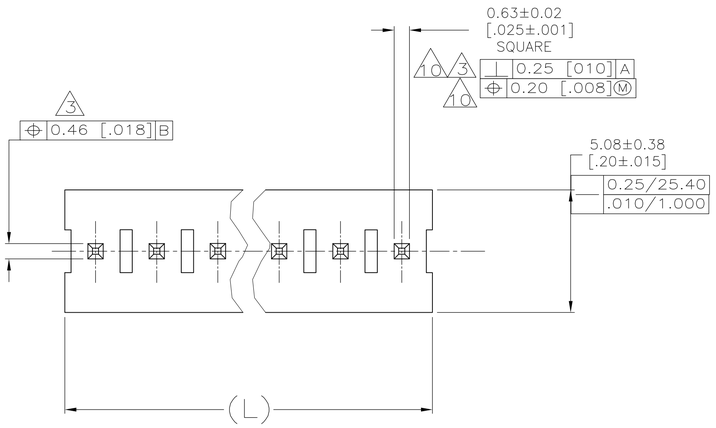

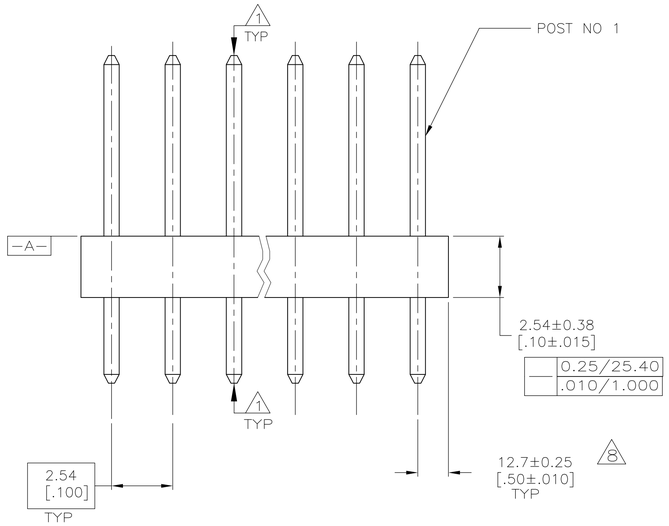

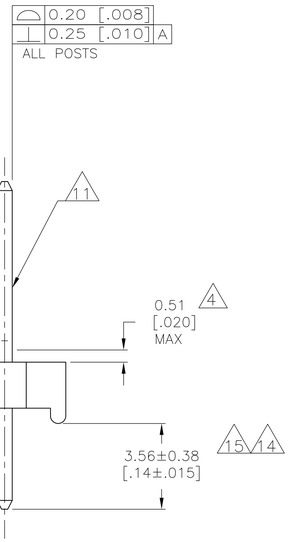

1. POST TO WITHSTAND 13 NEWTONS (3 LBS) MINIMUM AXIAL FORCE IN BOTH DIRECTIONS SHOWN WITHOUT DISLODGING.
2. TOLERANCES APPLY TO SOLDER SIDE OF BOARD.
3. MEASURED AT −A−
4. PLASTIC FLASH PERMITTED IN THIS AREA.
5. PARTS COMPLY WITH AMP SOLDERABILITY SPEC. NO. 109-11-2.
6. ONE HOLE MAY BE UNDERSIZED 0.81-0.89 [.032-.035] DIA. FOR ASSEMBLY RETENTION DURING WAVE SOLDERING.
7. MATERIAL: HEADER-THERMOPLASTIC POLYESTER 94V-0 (NATURAL)
   POST-COPPER ALLOY
   FINISH-USE PLATING NOTES 13 & 14 FOR -2 THRU -28 AND NOTES 13 & 15 FOR -32 THRU -58
8. COORDINATE DIMENSION APPLIES FROM CENTER OF ACTUAL FEATURE.
9. PLASTIC BURRS CAUSED BY CUT-OFF TOOLING ARE PERMITTED WITHIN THE MAXIMUM TOLERANCE ENVELOPE.
10. POSTS TO BE MEASURED WHEN STRIP IS HELD FLAT.
11. POST MUST WITHSTAND TWO 90° BENDS AGAINST EXTRUSION WITHOUT BREAKING.
12. DIMENSION SHOULD BE 3.05 [.120] MIN WHEN MATING WITH A MTA-100 CONNECTOR ASSEMBLY OR A CST-100 CONNECTOR ASSEMBLY.
13. PLATING: GOLD PLATE AREA, 0.00038 [.000015] GOLD OR 0.00008 [.000003] MIN GOLD FLASH OVER 0.00030 [.000012] PALLADIUM NICKEL, PER TE CONNECTIVITY'S DISCRETION, ALL SIDES, OVER NICKEL UNDERPLATE, .00127 [.000050] MIN, ALL SIDES AND ENTIRE LENGTH OF POST.
14. PLATING: BRIGHT TIN/LEAD (93/7) PLATE AREA, 0.00381-0.00889 [.000150-.000350] THICK, ALL FOUR SIDES 3.56 [.140] MINIMUM.
15. PLATING: MATTE TIN PLATE AREA,0.00381-0.00889[.000150-.000350] THICK, ALL FOUR SIDES 3.56 [.140] MINIMUM.
16. OBSOLETE PARTS: OBSOLETE CIS STREAMLINING PER D.RENAUD/D.SINISI

LEAD FREE				CONTAINS LEAD				
DIM (L)	NO.OF POSN	ASSEMBLY		DIM (L)	NO.OF POSN	ASSEMBLY	
71.12 [2.800]	28	5-641122-8	16	71.12 [2.800]	28	~~2-641122-8~~	SUPERSEDED BY 5-641122-8
68.58 [2.700]	27	5-641122-7	16	68.58 [2.700]	27	~~2-641122-7~~	SUPERSEDED BY 5-641122-7
66.04 [2.600]	26	5-641122-6	16	66.04 [2.600]	26	~~2-641122-6~~	SUPERSEDED BY 5-641122-6
63.50 [2.500]	25	5-641122-5	16	63.50 [2.500]	25	~~2-641122-5~~	SUPERSEDED BY 5-641122-5
60.96 [2.400]	24	5-641122-4	16	60.96 [2.400]	24	~~2-641122-4~~	SUPERSEDED BY 5-641122-4
58.42 [2.300]	23	5-641122-3	16	58.42 [2.300]	23	~~2-641122-3~~	SUPERSEDED BY 5-641122-3
55.88 [2.200]	22	5-641122-2	16	55.88 [2.200]	22	~~2-641122-2~~	SUPERSEDED BY 5-641122-2
53.34 [2.100]	21	5-641122-1	16	53.34 [2.100]	21	~~2-641122-1~~	SUPERSEDED BY 5-641122-1
50.80 [2.000]	20	5-641122-0	16	50.80 [2.000]	20	~~2-641122-0~~	SUPERSEDED BY 5-641122-0
48.26 [1.900]	19	4-641122-9	16	48.26 [1.900]	19	~~1-641122-9~~	SUPERSEDED BY 4-641122-9
45.72 [1.800]	18	4-641122-8	16	45.72 [1.800]	18	~~1-641122-8~~	SUPERSEDED BY 4-641122-8
43.18 [1.700]	17	4-641122-7	16	43.18 [1.700]	17	~~1-641122-7~~	SUPERSEDED BY 4-641122-7
40.64 [1.600]	16	4-641122-6	16	40.64 [1.600]	16	~~1-641122-6~~	SUPERSEDED BY 4-641122-6
38.10 [1.500]	15	4-641122-5	16	38.10 [1.500]	15	~~1-641122-5~~	SUPERSEDED BY 4-641122-5
35.56 [1.400]	14	4-641122-4	16	35.56 [1.400]	14	~~1-641122-4~~	SUPERSEDED BY 4-641122-4
33.02 [1.300]	13	4-641122-3	16	33.02 [1.300]	13	~~1-641122-3~~	SUPERSEDED BY 4-641122-3
30.48 [1.200]	12	4-641122-2	16	30.48 [1.200]	12	~~1-641122-2~~	SUPERSEDED BY 4-641122-2
27.94 [1.100]	11	4-641122-1	16	27.94 [1.100]	11	~~1-641122-1~~	SUPERSEDED BY 4-641122-1
25.40 [1.000]	10	4-641122-0	16	25.40 [1.000]	10	~~1-641122-0~~	SUPERSEDED BY 4-641122-0
22.86 [.900]	9	3-641122-9	16	22.86 [.900]	9	~~641122-9~~	SUPERSEDED BY 3-641122-9
20.32 [.800]	8	3-641122-8	16	20.32 [.800]	8	~~641122-8~~	SUPERSEDED BY 3-641122-8
17.78 [.700]	7	3-641122-7	16	17.78 [.700]	7	~~641122-7~~	SUPERSEDED BY 3-641122-7
15.24 [.600]	6	3-641122-6	16	15.24 [.600]	6	~~641122-6~~	SUPERSEDED BY 3-641122-6
12.70 [.500]	5	3-641122-5	16	12.70 [.500]	5	~~641122-5~~	SUPERSEDED BY 3-641122-5
10.16 [.400]	4	3-641122-4		10.16 [.400]	4	641122-4	
7.62 [.300]	3	3-641122-3	16	7.62 [.300]	3	~~641122-3~~	SUPERSEDED BY 3-641122-3
5.08 [.200]	2	3-641122-2	16	5.08 [.200]	2	~~641122-2~~	SUPERSEDED BY 3-641122-2

THIS DRAWING IS A CONTROLLED DOCUMENT.

DIMENSIONS: mm [INCHES]

TOLERANCES UNLESS OTHERWISE SPECIFIED:
0 PLC ±
1 PLC ±
2 PLC ± 0.13 [.025]
3 PLC ±
4 PLC ±
ANGLES ±

MATERIAL 7 FINISH 7

DWN S. HOOVER 26-JAN-2005
CHK D. BOSSI 26-JAN-2005
APVD D. BOSSI 26-JAN-2005
PRODUCT SPEC –
APPLICATION SPEC –
WEIGHT –

TE Connectivity

NAME MTA- .100 HDR ASSY, PLAIN, .025 SQUARE STRAIGHT POST .000015 GOLD PLATED

SIZE A1 | CAGE CODE 00779 | DRAWING NO C-641122 | RESTRICTED TO

CUSTOMER DRAWING | SCALE 8:1 | SHEET 1 OF 1 | REV U2