MATERIALS AND FINISHES

BODY ZINC ALLOY
PLATED NICKEL

CENTER CONTACT PHOSPHOR BRONZE
PLATED GOLD

INSULATOR POLYPROYLENE (94V0)

BOARD LOCK PHOSPHOR BRONZE
PLATED TIN

SOLDER TAIL COPPER
PLATED TIN

LOCK WASHER PHOSPHOR BRONZE
PLATED NICKEL

NUT BRASS
PLATED NICKEL

PACKAGING: BY TRAY

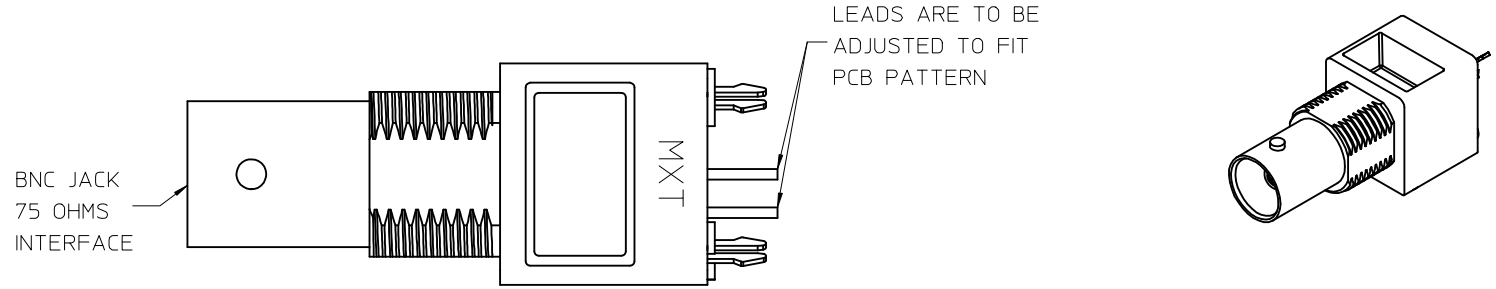

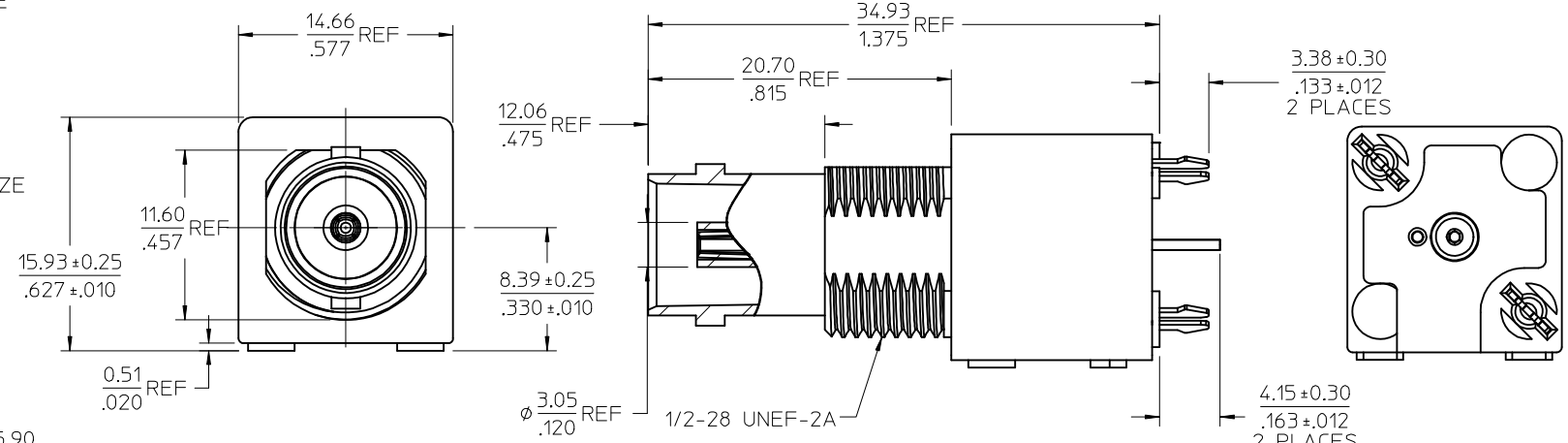

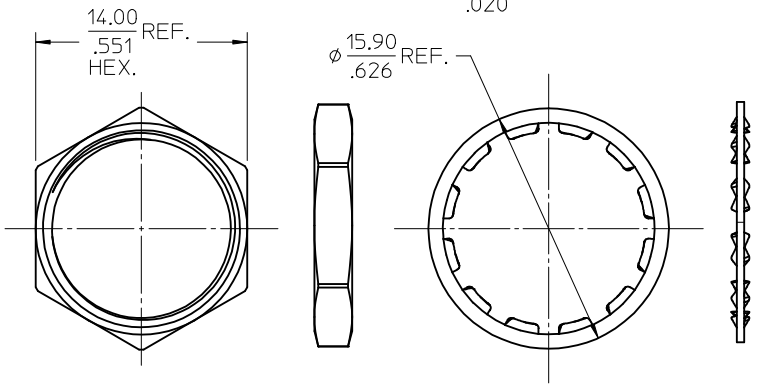

PART # 73101-0190

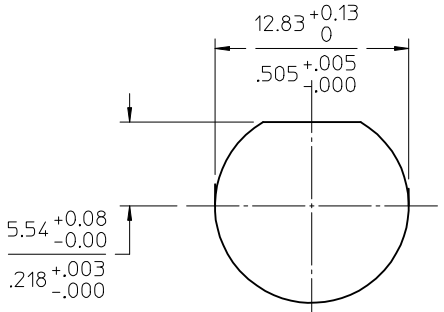

RECOMMENDED MOUNTING HOLE
MAXIMUM PANEL THICKNESS: 5.40(.213)
RECOMMENDED MOUNTING TORQUE:
1.36 N-m(12 INCH-LBS)

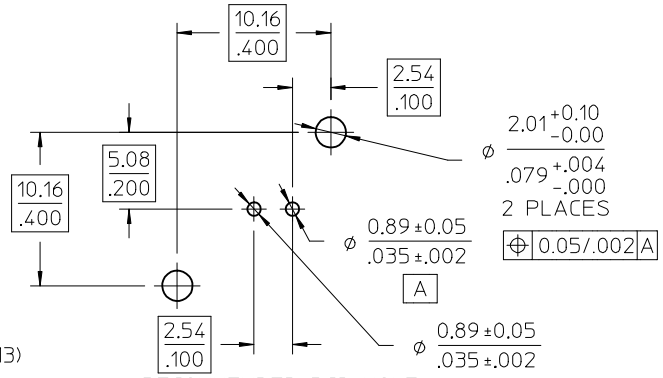

RECOMMENDED PCB HOLE
CONFIGURATION

PS-73598-0051	PRODUCT SPECIFICATION
SPECIFICATION	DESCRIPTION

CHG: ADDED PKG
PER RF15-E286
EC NO: URF2016-0101 2015/08/14
DRWN:CWE102
CH'KD:
APPR:YCHENG 2015/08/19
DESCRIPTION
REV
A2

QUALITY SYMBOLS
=0
=0
=0

GENERAL TOLERANCES (UNLESS SPECIFIED)

	mm	INCH
4 PLACES	± ---	± ---
3 PLACES	± ---	± ---
2 PLACES	± ---	± ---
1 PLACE	± ---	± ---
0 PLACE	±	±

ANGULAR ± 2 °
DRAFT WHERE APPLICABLE MUST REMAIN WITHIN DIMENSIONS

DIMENSION STYLE: MM/IN
SCALE
DESIGN UNITS: METRIC
THIRD ANGLE PROJECTION

		DATE
DRAWN BY	EVITA	2007/04/20
CHECKED BY	RENEE	2007/04/20
APPROVED BY	MISEN	2007/04/20

MATERIAL NO. 731010190

TITLE: BNC JACK, VERTICAL PCB, DIE CAST,75 OHMS WITH WASHER, NUT BNC-J/PCB

molex

DOCUMENT NO. SD-73101-019
SHEET NO. 1 OF 1

SIZE C

THIS DRAWING CONTAINS INFORMATION THAT IS PROPRIETARY TO MOLEX INCORPORATED AND SHOULD NOT BE USED WITHOUT WRITTEN PERMISSION