MATERIALS AND FINISHES:

BODY: BRASS
PLATED: GOLD (10µ-in MIN)
OVER NICKEL (100µ-in MIN)

REAR BODY: BRASS
PLATED: GOLD (5µ-in MIN)
OVER NICKEL (50µ-in MIN)

CONTACT: BERYLLIUM COPPER
PLATED: GOLD (10µ-in MIN)
OVER NICKEL (100µ-in MIN)

INSULATOR: PTFE

CRIMP TUBE: BRASS
PLATED: GOLD (5µ-in MIN)
OVER NICKEL (50µ-in MIN)

RETAINING CLIP: BERYLLIUM COPPER
PLATED: NICKEL (100µ-in MIN)

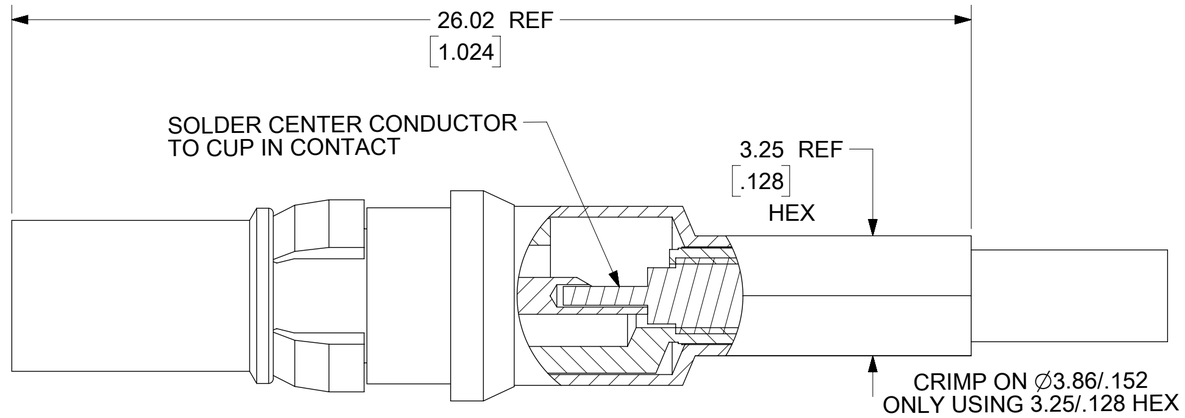

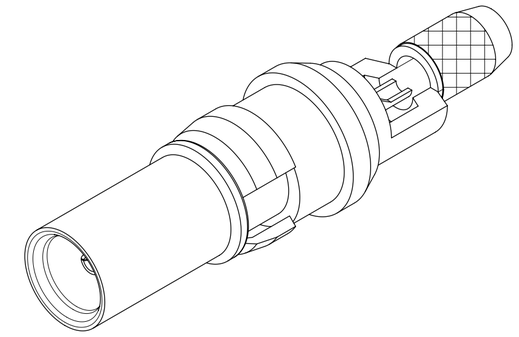

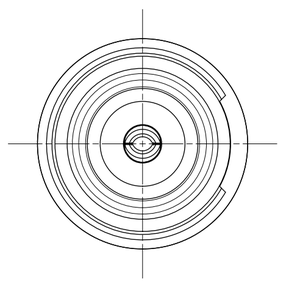

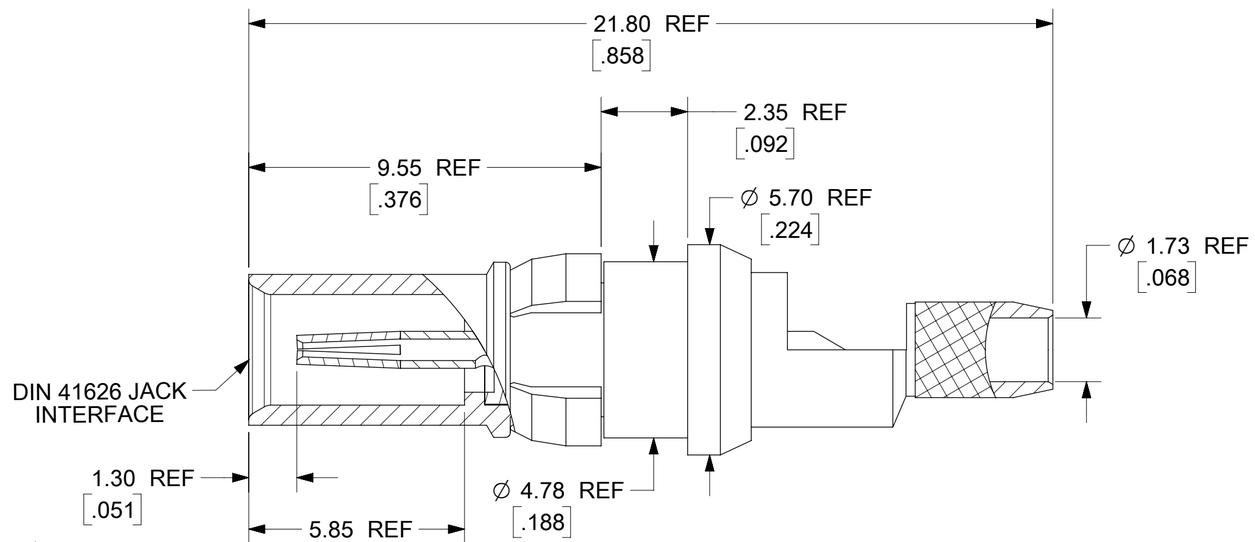

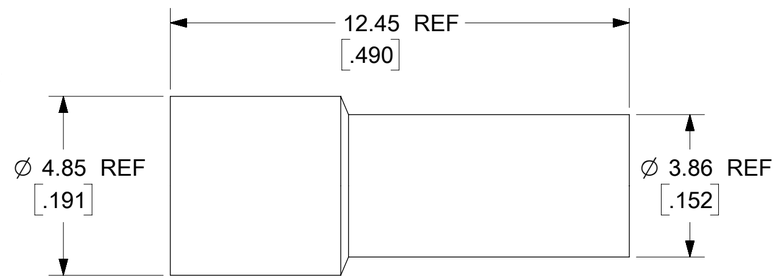

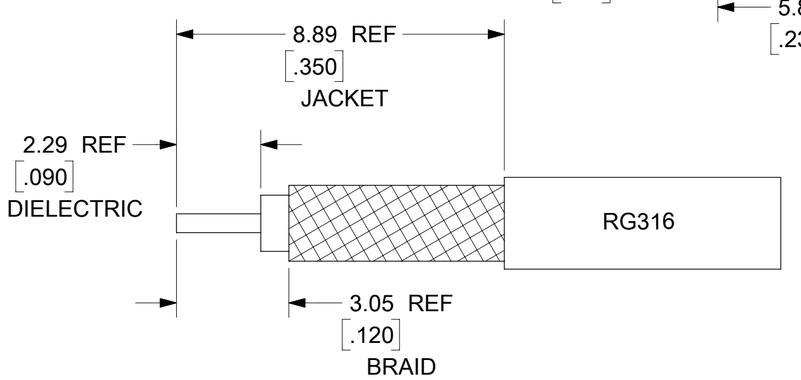

CABLE STRIP DIMENSIONS

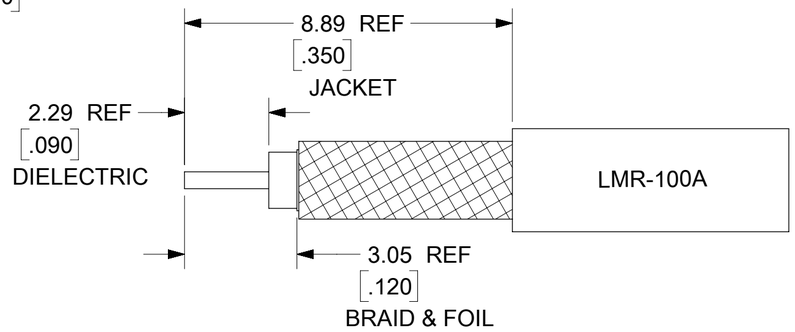

CABLE STRIP DIMENSIONS

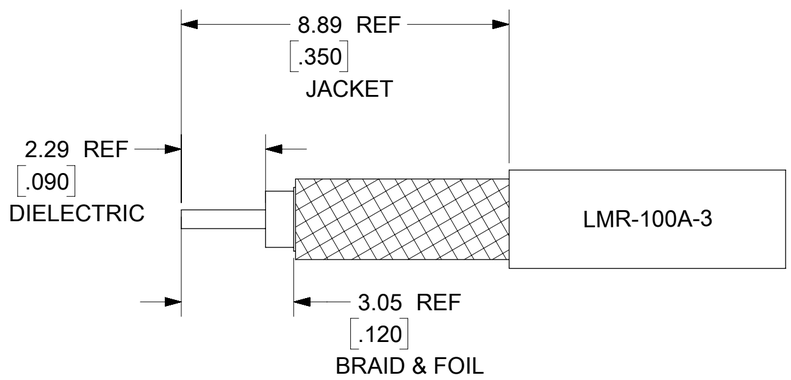

CABLE STRIP DIMENSIONS

PART # 73174-0270

PS-89675-3450	ELEC/MECH PERFORMANCE
DIN 41626	INTERFACE SPECIFICATION
SPECIFICATION	DESCRIPTION

QUALITY SYMBOLS
FA = 0
FC = 0
FP = 0
= 0
C = 0
= 0
= 0
G = 0

THIS DRAWING CONTAINS INFORMATION THAT IS PROPRIETARY TO MOLEX ELECTRONIC TECHNOLOGIES, LLC AND SHOULD NOT BE USED WITHOUT WRITTEN PERMISSION

MIGRATED AND REVISED
EC NO: 110852 2016/11/21
DRWN: APRAKASH01 2017/01/12
CHK'D: APRAKASH01
APPR: AROBERTSON 2017/01/18
REV: B

GENERAL TOLERANCES (UNLESS SPECIFIED)

	MM	INCH
4 PLACES	±	±
3 PLACES	±	± 0.01
2 PLACES	± 0.25	±
1 PLACES	±	±
0 PLACES	±	±

ANGULAR TOL ± 2.0

DRAFT WHERE APPLICABLE MUST REMAIN WITHIN DIMENSIONS

DIMENSION UNITS: MM
SCALE:
DRWN BY: AROBERTSON DATE: 2008/02/11
CHK'D BY: SSHAH DATE: 2004/04/02
APPR BY: JWIENER DATE: 2008/02/11
DRAWING SIZE: C
THIRD ANGLE PROJECTION

molex®

DIN 41626 JACK, 50 OHM
RG316, LMR100A, LMR100A3, 10/23-JC, EWR-10019

PRODUCT CUSTOMER DRAWING

SERIES	MATERIAL NUMBER	CUSTOMER
73174	731740270	

DOCUMENT NUMBER	DOC TYPE	DOC PART	SHEET NUMBER
SD-73174-027	PSD	000	1 OF 1

RELEASE STATUS | RELEASE DATE

FORMAT: IN-master-tb-prod-C
REVISION: B
DATE: 2016/02/02