THIS DRAWING IS UNPUBLISHED. RELEASED FOR PUBLICATION -,- .
© COPYRIGHT - By - ALL RIGHTS RESERVED.

LOC	DIST
GP	00

REVISIONS

P	LTR	DESCRIPTION	DATE	DWN	APVD
	M1	REVISED PER ECO-11-004835	11MAR11	RK	HMR

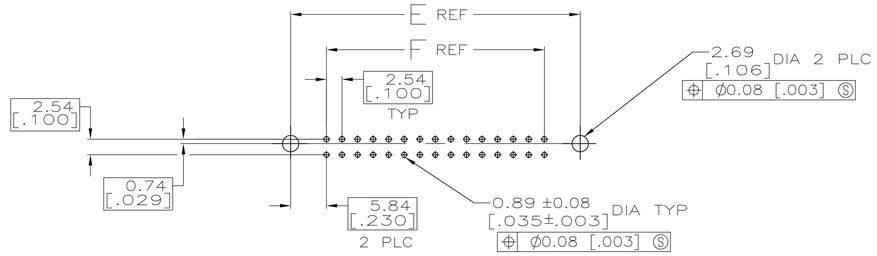

RECOMMENDED
PC BOARD MOUNTING DIMENSIONS
SCALE 2:1

1. COORDINATE DIMENSION APPLIES FROM BASIC LOCATION.
2. 8, 10 AND 14 POSITION SIZES CONTAIN ONLY ONE SLOT FOR SNAP-IN POLARIZER (MILITARY POLARIZATION) LOCATED AS SHOWN.
3. 8 AND 10 POSITION SIZES CONTAIN ONLY ONE SLOT FOR DUAL POLARIZATION, LOCATED AS SHOWN.
4. RECOMMENDED PRINTED CIRCUIT BOARD THICKNESS IS 1.57[.062].
5. POSTS: GOLD FLASH OVER PALLADIUM-NICKEL PLATE,
0.76μm[.000030] MIN TOTAL ON THE LOCALIZED PLATE AREA,
2.54μm[.000100] MIN TIN-LEAD PLATE ON THE SOLDER-TAIL,
1.27μm[.000050] MIN NICKEL UNDERPLATE ON THE ENTIRE POST.
-OR-
0.76μm[.000030] MIN GOLD PLATE ON THE LOCALIZED PLATE AREA,
2.54μm[.000100] MIN TIN-LEAD PLATE ON THE SOLDER-TAIL,
1.27μm[.000050] MIN NICKEL UNDERPLATE ON THE ENTIRE POST.

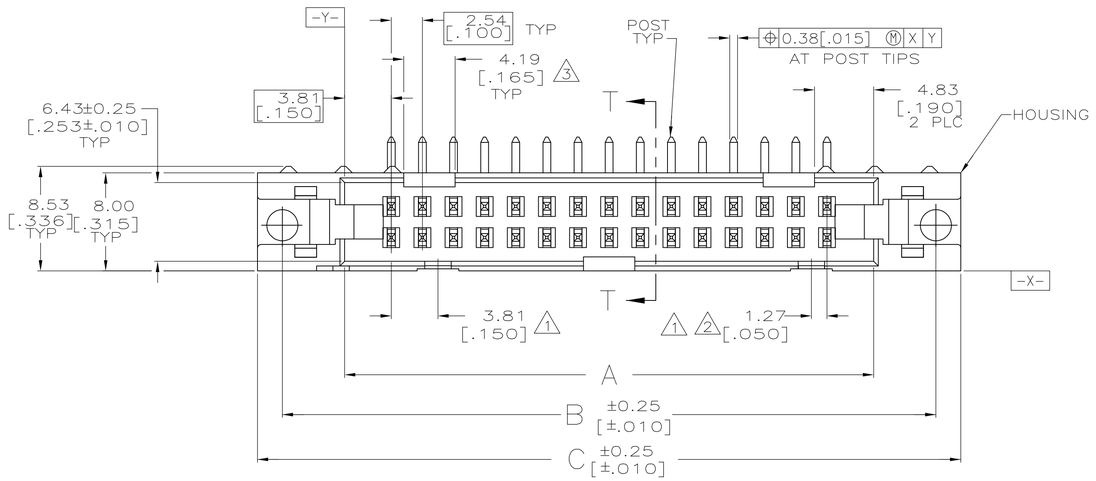

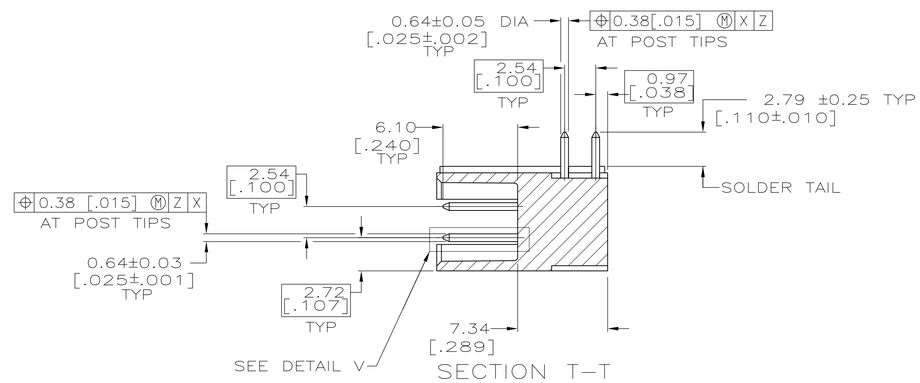

SECTION T-T

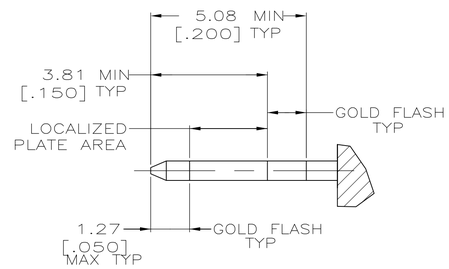

DETAIL V
SCALE 10:1

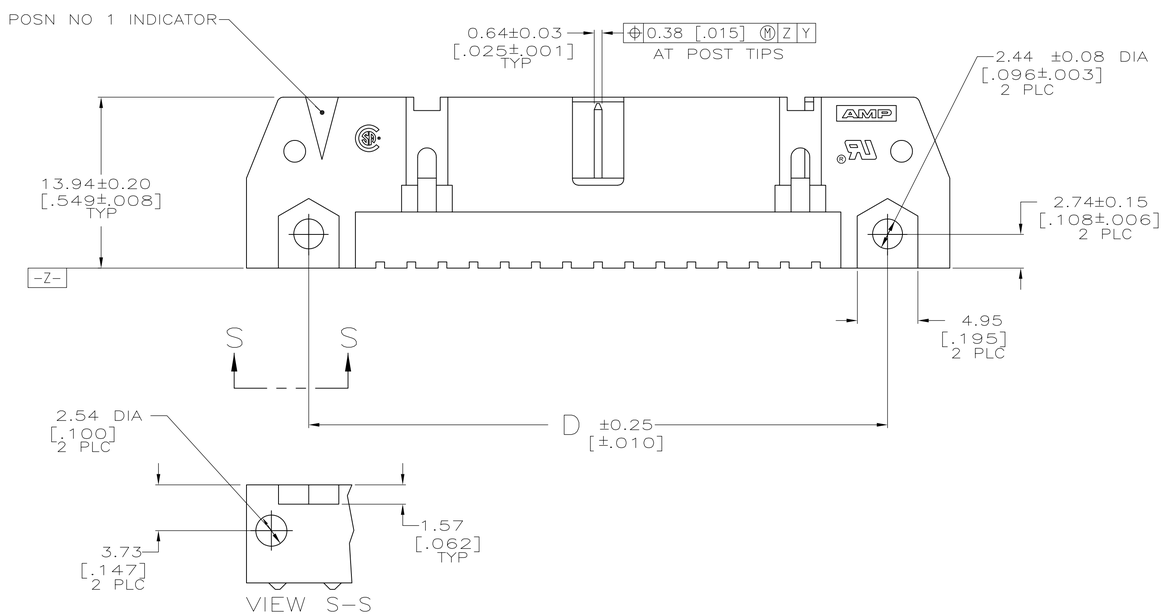

VIEW S-S

	F	E	D	C	B	A	NO OF POSN	PART NUMBER
OBSOLETE	7.62 [.300]	19.30 [.760]	19.30 [.760]	29.46 [1.160]	25.40 [1.000]	15.24 [.600]	8	1-102160-4
OBSOLETE	53.34 [2.100]	65.02 [2.560]	65.02 [2.560]	75.18 [2.960]	71.12 [2.800]	60.96 [2.400]	44	1-102160-3
	78.74 [3.100]	90.42 [3.560]	90.42 [3.560]	100.58 [3.960]	96.52 [3.800]	86.36 [3.400]	64	1-102160-2
	73.66 [2.900]	85.34 [3.360]	85.34 [3.360]	95.50 [3.760]	91.44 [3.600]	81.28 [3.200]	60	1-102160-1
	60.96 [2.400]	72.64 [2.860]	72.64 [2.860]	82.80 [3.260]	78.74 [3.100]	68.58 [2.700]	50	1-102160-0
	48.26 [1.900]	59.94 [2.360]	59.94 [2.360]	70.10 [2.760]	66.04 [2.600]	55.88 [2.200]	40	102160-9
	40.64 [1.600]	52.32 [2.060]	52.32 [2.060]	62.48 [2.460]	58.42 [2.300]	48.26 [1.900]	34	102160-8
OBSOLETE	35.56 [1.400]	47.24 [1.860]	47.24 [1.860]	57.40 [2.260]	53.34 [2.100]	43.18 [1.700]	30	102160-7
	30.48 [1.200]	42.16 [1.660]	42.16 [1.660]	52.32 [2.060]	48.26 [1.900]	38.10 [1.500]	26	102160-6
	27.94 [1.100]	39.62 [1.560]	39.62 [1.560]	49.78 [1.960]	45.72 [1.800]	35.56 [1.400]	24	102160-5
	22.86 [.900]	34.54 [1.360]	34.54 [1.360]	44.70 [1.760]	40.64 [1.600]	30.48 [1.200]	20	102160-4
	17.78 [.700]	29.46 [1.160]	29.46 [1.160]	39.62 [1.560]	35.56 [1.400]	25.40 [1.000]	16	102160-3
OBSOLETE	15.24 [.600]	26.92 [1.060]	26.92 [1.060]	37.08 [1.460]	33.02 [1.300]	22.86 [.900]	14	102160-2
	10.16 [.400]	21.84 [.860]	21.84 [.860]	32.00 [1.260]	27.94 [1.100]	17.78 [.700]	10	102160-1

THIS DRAWING IS A CONTROLLED DOCUMENT.

DIMENSIONS: INCHES

TOLERANCES UNLESS OTHERWISE SPECIFIED:
0 PLC ± -
1 PLC ± -
2 PLC ± 0.13[.005]
3 PLC ± -
4 PLC ± -
ANGLES ± -

MATERIAL
HOUSING: GLASS FILLED NYLON OR POLYESTER, 94V-0 RATED, BLACK
POSTS: BRASS

FINISH 5

DWN H.MOLL 4-23-90
CHK R.STONE 11/28/90
APVD S. GOOD 11-29-90
PRODUCT SPEC 108-40018
APPLICATION SPEC -
WEIGHT -

TE Connectivity

NAME HEADER ASSY, UNIVERSAL, AMP-LATCH -

SIZE	CAGE CODE	DRAWING NO	RESTRICTED TO
A1	00779	C-102160	-

CUSTOMER DRAWING

SCALE	SHEET	REV
4:1	1 OF 1	M1

4805 (3/11)