© TE Connectivity. All Rights Reserved.
VERTRAULICHE UNVEROEFFENTLICHTE ZEICHNUNG
FREI FUER VEROEFFENTLICHUNG
ALLE RECHTE VORBEHALTEN

MATED WITH:
PASSEND ZU:
HA 16

| REVISIONS AENDERUNGEN | | | | | |
|---|---|---|---|---|---|
| P | LTR | DESCRIPTION BESCHREIBUNG | DATE | DWN | APVD |
| | D7 | REVISED PER ECR-21-123577 | 08JUL2022 | RK | JB |

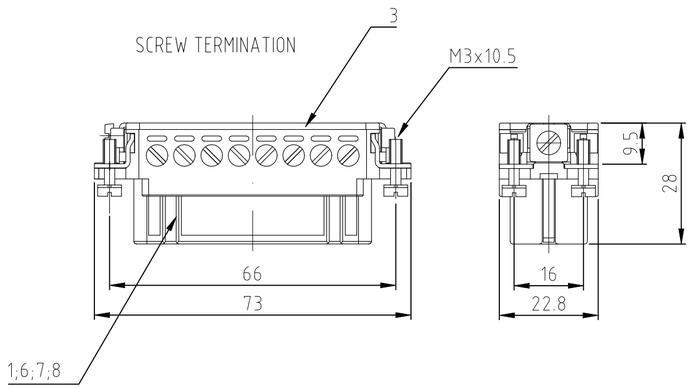


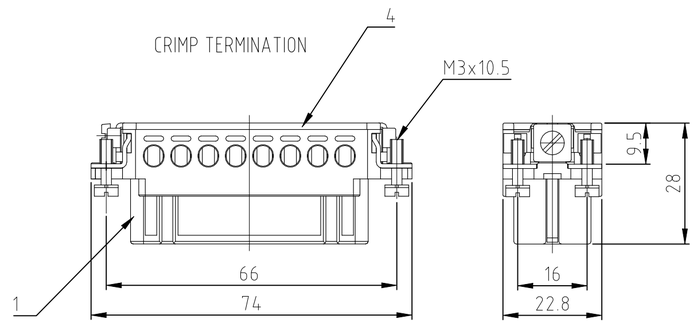


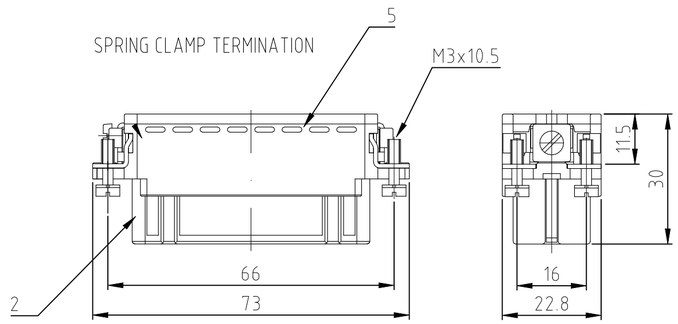


Contact arrangement / view from termination side

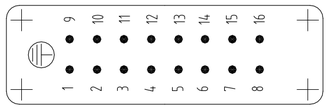


Contact arrangement / view from termination side

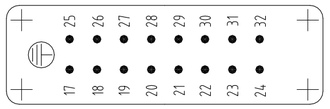


Contact arrangement / view from termination side

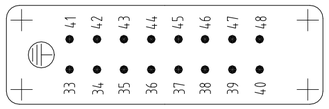


Contact arrangement / view from termination side

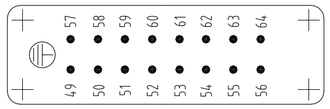


Panel cut-out for contact insert when used without housing

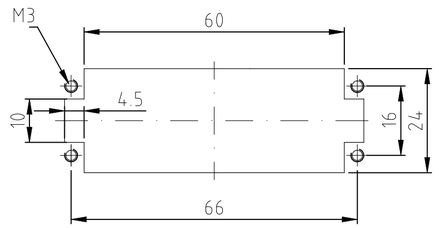


Assembling instruction

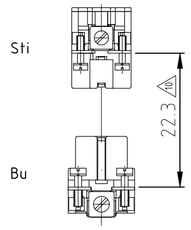


10 DISTANCE FOR SAFETY CONTACT MARKING MAX. 24 mm

NOTES:

1 SUITABLE CRIMP CONTACTS: SERIES HE/HA
OUTER DIMENSIONS OF INSULATION: MAX. Ø3,2 MM

2 SUITABLE HOOD SIZE 5; 7; 9; 11: SERIES HA; HD
SUITABLE INSERTION AND EXTRACTION TOOL:
SCREWDRIVER 0,5x3 DIN 5264

3 Strip lenght: Screw conection 10mm
Spring clamp conection 10mm Crimp conection 7.5mm

4 STANDARDS:
DIN EN 61984; DIN EN 60664-1

5 PACKAGING:
5 SETS IN A CARTON, PRE-MOUNTED

6 SPECIAL PACKAGING: Krauss-Maffei
PACKAGING UNIT: 300 PIECES

7 SPECIAL PACKAGING: Krauss-Maffei
PACKAGING UNIT: 150 PIECES

8 SPECIAL PACKAGING: AIS
PACKAGING UNIT: 250 PIECES

9 SPECIAL PACKAGING: WIELAND
PACKAGING UNIT: 100 PIECES

| ORDERING TEXT / BESTELLTEXT | 9 | 8 | 7 | 6 | 5 | 5 | 5 | 5 | 5 | 5 | 5 | 5 | 5 | 5 | 5 | 5 | 5 | 5 | 5 | 5 | 5 | DESCRIPTION / BENENNUNG | MATERIAL | COLOR / FARBE | ITEM NO. POS. | REMARKS / BEMERKUNGEN |
|---|---|---|---|---|---|---|---|---|---|---|---|---|---|---|---|---|---|---|---|---|---|---|---|---|---|---|
| ~~HA.16.Bu.S.B1-16.WIE~~ | OBSOLETE | OBSOLETE | OBSOLETE | | OBSOLETE | OBSOLETE | OBSOLETE | OBSOLETE | OBSOLETE | OBSOLETE | OBSOLETE | | OBSOLETE | | OBSOLETE | OBSOLETE | OBSOLETE | | | | | Socket insert screw | PBT | light beige | 8 | with stainless steel-fixing screw |
| HA.16.Bu.S.B1-16.AIS | | | | | 1 | | | | | | | | | | | | | | | | | Socket insert screw | PBT | light beige | 7 | with stainless steel-fixing screw |
| HA.16.Bu.S.B17-32.KM | | | | | | 1 | | | | | | | | | | | | | | | | Socket insert screw | PBT | light beige | 6 | with AU contact |
| HA.16.Bu.S.B1-16.KM | | | | | | | 1 | | | | | 1 | 1 | | | 1 | | 1 | | | | Cover | PBT | light beige | 5 | |
| ~~HA.16.Bu.S.VA.B 1-16~~ | | | | | | | | 1 | | | | | | | 1 | | 1 | | 1 | | | Cover | PBT | light beige | 4 | |
| ~~HA.16.Bu.S.-VA.B 17-32~~ | 1 | 1 | 1 | 1 | 1 | 1 | 1 | | 1 | | | | | 1 | | 1 | | | | 1 | | Cover | PBT | light beige | 3 | |
| ~~HA.16.Bu.S.AU.B 1-16~~ | | | | | | | | | | | | 1 | 1 | | | | 1 | | 1 | | | Socket insert spring clamp | PBT | light beige | 2 | |
| ~~HA.16.Bu.C.B 49-64~~ | 1 | 1 | 1 | 1 | | | | 1 | 1 | | | | | 1 | 1 | 1 | | 1 | | 1 | 1 | Socket insert crimp screw | PBT | light beige | 1 | |
| HA.16.Bu.S.B 49-64 | 1-3 | 1-2 | 1-0 | 0-7 | 0-4 | 0-6 | 0-5 | 2-9 | 1-9 | 7-9 | 7-8 | 1-8 | 2-8 | 1-7 | 7-7 | 2-7 | 7-1 | 2-3 | 1-1 | | | DESCRIPTION / BENENNUNG | MATERIAL | COLOR / FARBE | ITEM NO. POS. | REMARKS / BEMERKUNGEN |
| ~~HA.16.Bu.S.B 49-64~~ | | | | | | | | | | | | | | | | | | | | | | | | | | |
| ~~HA.16.Bu.S.B 33-48~~ | | | | | | | | | | | | | | | | | | | | | | | | | | |
| HA.16.Bu.S.B 33-48 | | | | | | | | | | | | | | | | | | | | | | | | | | |
| ~~HA.16.Bu.C.B 33-48~~ | | | | | | | | | | | | | | | | | | | | | | | | | | |
| HA.16.Bu.S.B 17-32 | | | | | | | | | | | | | | | | | | | | | | | | | | |
| ~~HA.16.Bu.SC.B 17-32~~ | | | | | | | | | | | | | | | | | | | | | | | | | | |
| ~~HA.16.Bu.C.B 17-32~~ | | | | | | | | | | | | | | | | | | | | | | | | | | |
| ~~HA.16.Bu.SC.B 1-16~~ | | | | | | | | | | | | | | | | | | | | | | | | | | |
| HA.16.Bu.C.B 1-16 | | | | | | | | | | | | | | | | | | | | | | | | | | |
| HA.16.Bu.S.B 1-16 | | | | | | | | | | | | | | | | | | | | | | | | | | |

THIS DRAWING IS A CONTROLLED DOCUMENT.
DIESE ZEICHNUNG IST EIN KONTROLLIERTES DOKUMENT.

DIMENSIONS: MASSE\NHEITEN: mm

TOLERANCES UNLESS OTHERWISE SPECIFIED: ALLGEMEINTOLERANZEN
0 PLC ±
1 PLC ± –
2 PLC ± –
3 PLC ± –
4 PLC ± –
ANGLES / WINKEL ± –
1. ISO 8015 2. ISO 2768 - m H 3. DIN 16901 - f3.5

MATERIAL –
FINISH / OBERFLAECHE / FARBE –

DWN Schneider 09.02.2000
CHK Schweiger 09.02.2000
APVD –
PRODUCT SPEC PRODUKTSPEZ. 108-74007
APPLICATION SPEC. VERABEITUNGSSPEZ. 114-74009
WEIGHT GEWICHT –

TE Connectivity

NAME Female insert HA.16.BU.C/S –

SIZE A2 | CAGE CODE 00779 | DRAWING NO ZEICHNUNGS-NR. C-1103417 | RESTRICTED TO NUR FUER –

CUSTOMER DRAWING / KUNDENZEICHNUNG | SCALE MASSSTAB 1:1 | SHEET BLATT 1 VON 1 | REV D7

1103417