Style
M12 Socket
5 pin
A-coding

Ratings
Voltage: 60 V
Current: 4 A

Operating Temperature Range
-40 ~ 85 °C

Materials
1. Insulator: TPU, black
2. Pin: C3604 brass, gold plated
3. Shell: C3604 brass, nickel plated
4. O-ring: Nitrile rubber, green

Electrical Requirements
Dielectric strength: 1 min @ 500 Vac
Insulation resistance: 100 MΩ @ 500 Vdc
Contact resistance: 10 mΩ or less

Mechanical Requirements
Life cycle: 500 mating cycles minimum

Environmental Requirements
Salt spray test: 35 °C, relative humidity 90-95%, 5% NaCl mist for 48 hrs. Wash parts after test. Maintain mechanical requirements and a contact resistance of less than 10 mΩ.
Waterproof: IP67

Assembly Info
Wire gauge: 22 AWG max

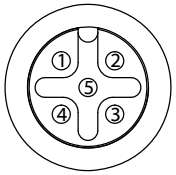

Front View
Not to Scale

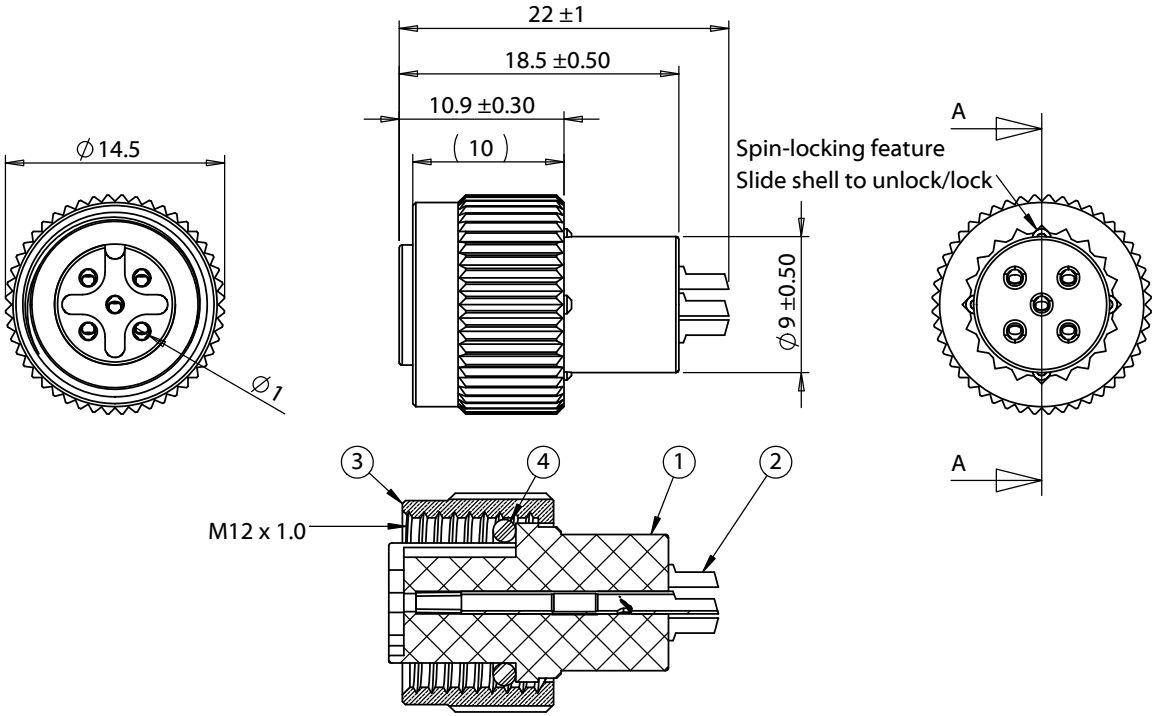

SECTION A-A

Revision:	Date:	Description:
A	8/4/2020	Initial release

Prepared: AW — Digitally signed by AW Date: 2020.10.12 12:44:53 -07'00'

Verified: AG — Digitally signed by AG Date: 2020.10.14 12:00:21 -07'00'

Dimensions are in millimeters.
Tolerances:
X: ± 0.3 mm
X.X: ± 0.1 mm
X.XX: ± 0.05 mm

Notes:
RoHS compliant

Function test: no open, no short circuit, no intermittent

Description:
Connector, 5 pin M12 A-code socket, 12xL22mm, gold plated, molding style, solder cup, IP67

TENSILITY

tel 1.541.323.3228 *800* 877.670.7118
fax 1.541.323.4202 *web* tensility.com

Size: A
Part number: 50-00967
Scale: 2:1
Sheet 1 of 1

5 4 3 2 1