ITEM NO.	PART NUMBER	DESCRIPTION	QTY.	COMPONENT NOTES
1	54-00296	Connector, 3 pin M8 A-code socket, 8x18.7 mm, gold plated, panel mount, solder cup, IP67	1	nut and o-ring included
2	Wire	Wire, hook-up, TS, 24 AWG, UL 11028, 600V, 105C, 1.1 mm, mPPE	3	color: red, black, white
3	Heat shrink	Heat shrink, UL, black	3	covers solder joints

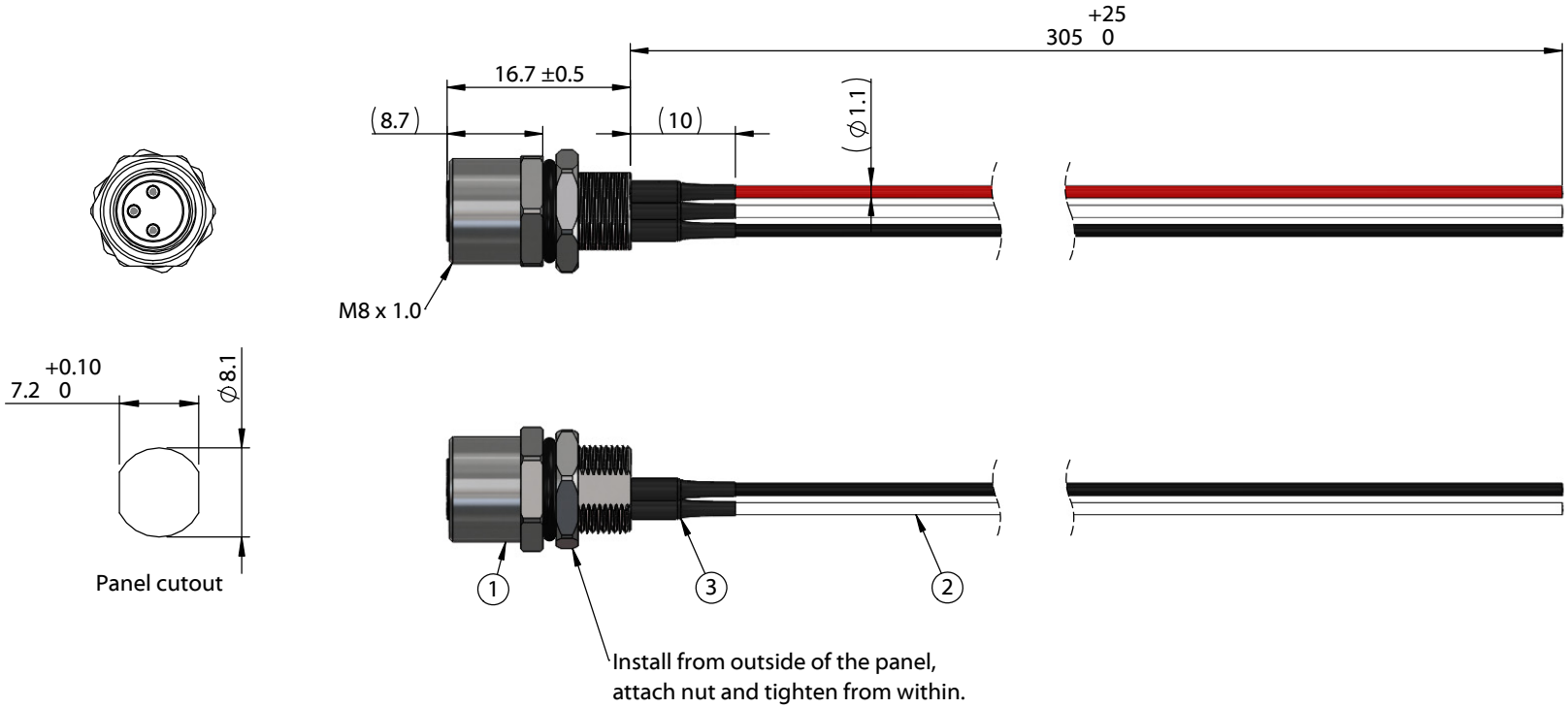

Notes:
Cable rated for 60 V, 3 A
Temperature: -40 ~ 105 °C

IP67 waterproof rating when mated with corresponding (IP67) connector and installed properly in panel

Cables individually packaged in PE bag
Functionally equivalent components may be substituted

Front View

Not to Scale

Wiring Diagram	
54-00296	wire color (P/N)
1	red (30-01762)
3	black (30-01763)
4	white (30-01764)

Revision:	Date:	Description:
A	10/20/2022	Initial release

Prepared: PB Digitally signed by PB Date: 2022.11.10 10:40:15 -08'00'

Verified: JD Digitally signed by JD Date: 2022.12.12 12:32:51 -08'00'

Dimensions are in millimeters.
Tolerances:
X: ± 0.5 mm
X.X: ± 0.3 mm
X.XX: ± 0.05 mm

Notes:

RoHS compliant

Function test: no open, no short circuit, no intermittent

Description:

Cable, 305 mm, M8 3C socket panel mount 54-00296 to blunt cut, 24 AWG, UL 11028 hook-up wire

TENSILITY

tel 1.541.323.3228 *800* 877.670.7118
fax 1.541.323.4202 *web* tensility.com

Size: A

Part number: 10-05203

Scale: 1.5:1

Sheet 1 of 1

5 4 3 2 1

To see a custom version of this cable assembly, call Tensility at 541-323-3228 or email engineering@tensility.com