© 2022 TE Connectivity. All Rights Reserved.

REVISIONS					
P	LTR	DESCRIPTION	DATE	DWN	APVD
	B4	ECR-21-123293	22FEB2022	RK	JB

1 Material: Housing: Aluminium Diecasting Alloy
Seals: Neoprene

2 Varnish on the inside not necessary

3 Packaging
packaging quantity 5 pieces in a box

4 Special design

5 Special packaging 50 pieces

PN 1-1.2-1 & 0-7

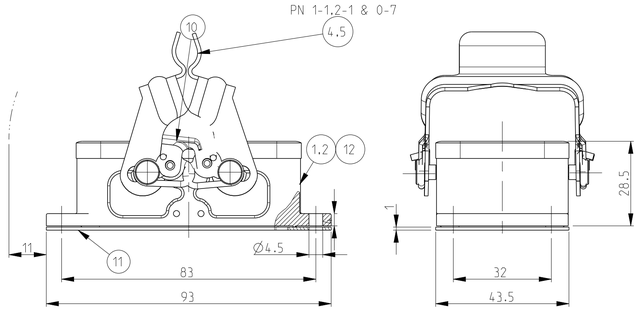

PN 1-2. 2-2. 8-1. 0-5. 0-8. 0-9 & 0-1

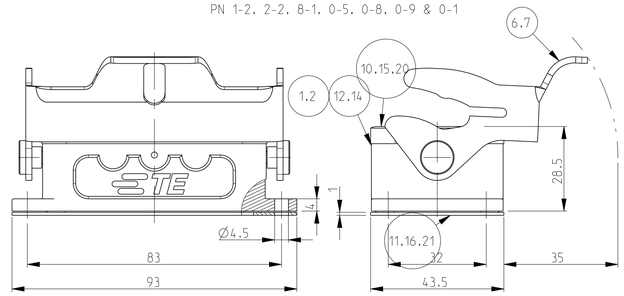

PN 0-2

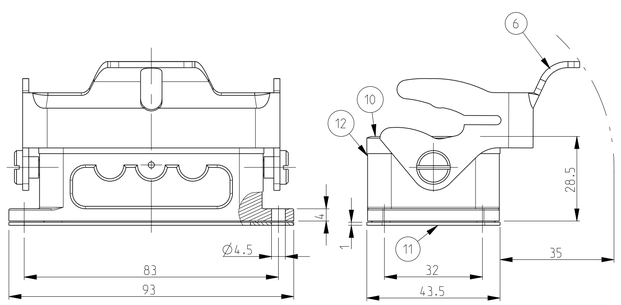

PN 0-2

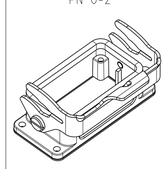

SCALE : 1:2

PN 0-4

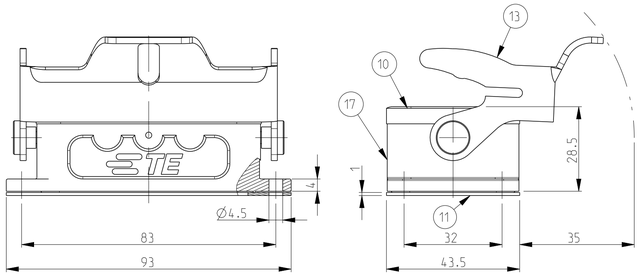

PN 0-6

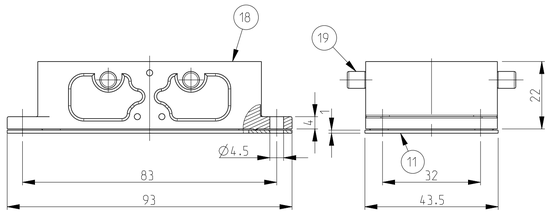

PN 1-8 & 2-8

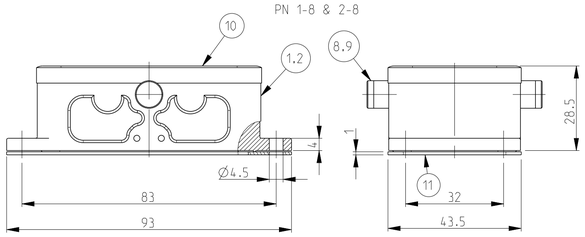

Panel cut-out

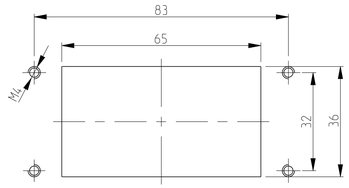

PN 1-8 & 2-8

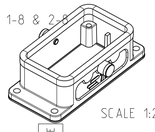

SCALE 1:2

PN 0-6

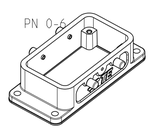

SCALE 1:2

PN 0-4

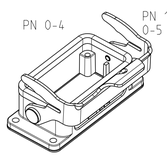

SCALE 1:2

PN 1-2.2-2.8-1.0-1.
0-5 & 0-8 & 0-9

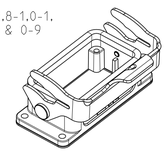

SCALE 1:2

PN 1-1.2-1.0-4 & 0-7

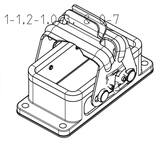

SCALE 1:2

0-1	0-9	0-8	0-7	0-6	0-5	0-4	0-2	8-1	2-8	1-8	2-2	1-2	2-1	1-1	DESCRIPTION	MATERIAL	SURFACE	COLOR	ITEM NO	NOTES
															Flange seal				21	
	1														Profile seal				20	
				4											Clip bolt-VS	Steel	Zinc plated	Blue	19	
				1											Surface mounted housing bottom entry HB	Aluminium		Grey	18	
						1									Surface mounted housing bottom entry HB	Aluminium		Grey	17	Grey 120-160 µm
					1										Flange seal	Neoprene			16	Conductive
					1										Profile seal	Neoprene			15	Conductive
					1										Surface mounted housing bottom entry HB	Aluminium		Without varnish	14	
						1									Side clip-LB	Steel	Zinc plated	Blue	13	
			1				1								Surface mounted housing bottom entry HB	Aluminium		Grey	12	Without logo
1		1	1	1		1	1	1	1	1	1	1	1	1	Flange seal	Neoprene		Black	11	
1		1	1			1	1	1	1	1	1	1	1	1	Profile seal	Neoprene		Black	10	
									2						Clip bolt-ZB	Stainless steel			9	
										2					Clip bolt-ZB	Steel	Zinc plated	Blue	8	
1											1				Side clip-LB	Stainless steel	Blank		7	
	1	1			1		1	1				1			Side clip-LB	Steel	Zinc plated	Blue	6	
													2		Locking clip-VS	Stainless steel			5	
			2											2	Locking clip-VS	Steel	Zinc plated	Blue	4	
1								1							Surface mounted housing bottom entry HB	Aluminium		Without varnish	3	
									1		1		1		Surface mounted housing bottom entry HB-K	Aluminium	Aluminium oxide	Black	2	
	1	1								1		1		1	Surface mounted housing bottom entry HB	Aluminium		Grey	1	

ORDERING TEXT
HB.10.AG-VS
HB-k.10.AG-VS
HB.10.AG-LB
HB-K.10.AG-LB
HB-Z.10.AG-ZVGR
HB-K/Z.10.AG-ZVGR
HB.10.AG-LB
HB.10.AG-LB
HB.10.AG-LB
HB-EMV.10.AG-LB
HB.10.AG-VS
HB.10.AG-VS
HB.10.AG-LB
HB.10.AG-LB
HB.10.AG-LB

THIS DRAWING IS A CONTROLLED DOCUMENT.

DIMENSIONS: mm

TOLERANCES UNLESS OTHERWISE SPECIFIED:
0 PLC ±
1 PLC ±
2 PLC ±
3 PLC ±
4 PLC ±
ANGLES ±

MATERIAL

FINISH

DWN Schweiger 23.07.1997
CHK Kramer 23.06.1998
APVD -

PRODUCT SPEC 108-74001/74003
APPLICATION SPEC 114-74001/74004/74005
WEIGHT

TE Connectivity

NAME Surface Mounted Housing Bottom Entry HB.10

SIZE	CAGE CODE	DRAWING NO	RESTRICTED TO
A1	00779	C-1102271	-

CUSTOMER DRAWING

SCALE	SHEET	OF	REV
1:1	1	1	B4