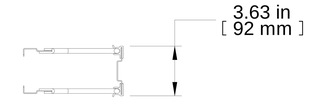

TOP VIEW

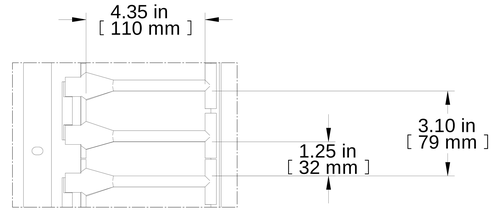

FINGER DETAIL
2:1

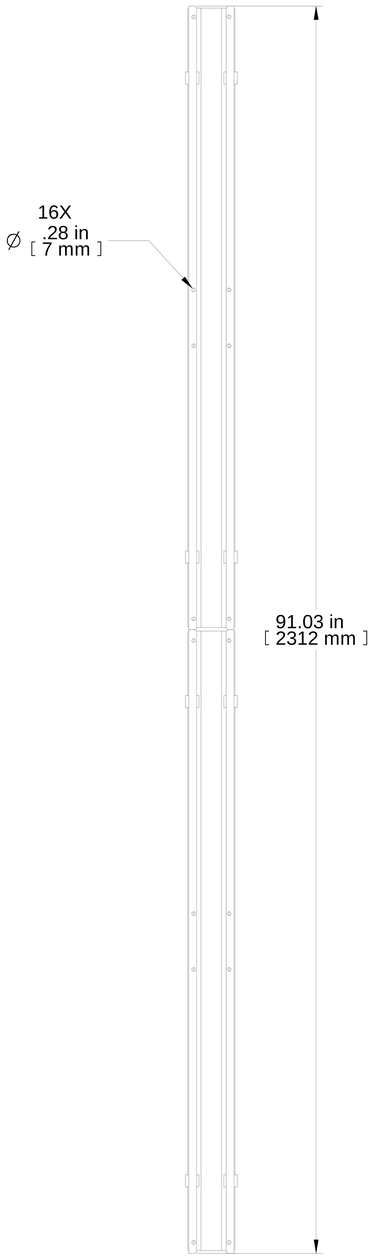

REAR VIEW

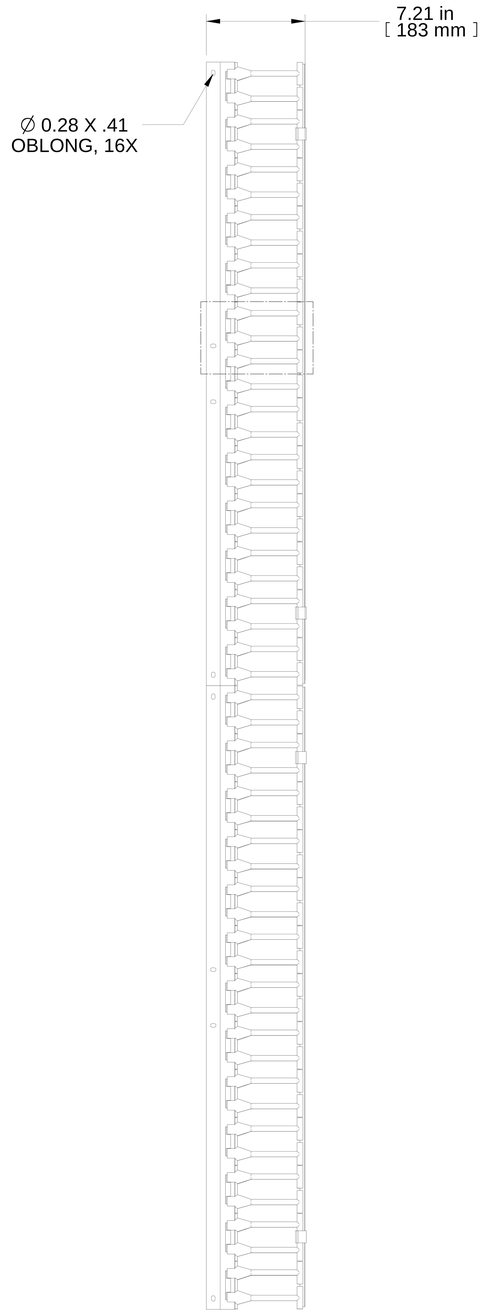

L.S. VIEW

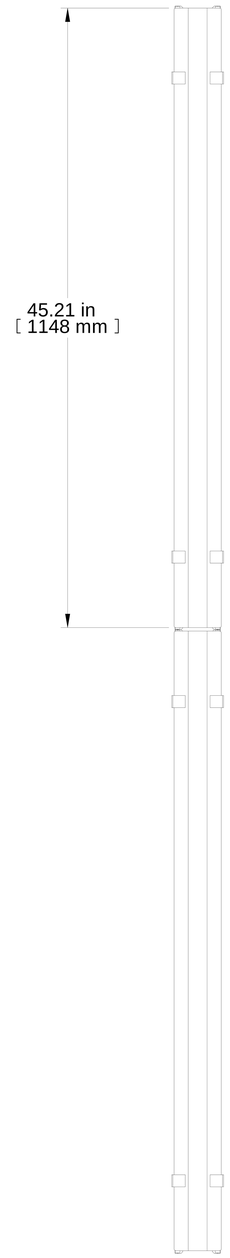

FRONT VIEW

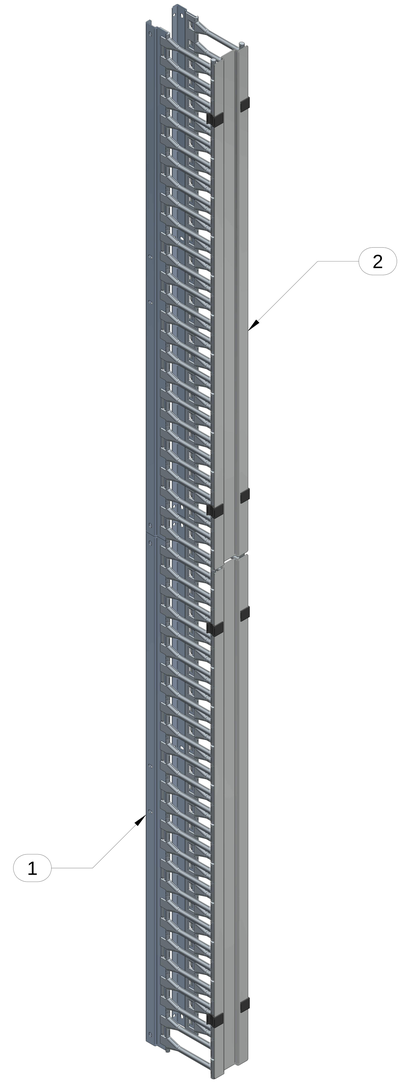

BOTTOM VIEW

Item Number	Title	Quantity
1	52U BACK PIECE W/ FINGERS	4
2	52U CABLE MNGR DOOR W/ CLIPS	2

PART NUMBERS

H1VFMC3052UBK | PAINTED BLACK TEXTURED

NOTES

Mounting Hardware Included

See Hammond Website for More Information

Français

Pour tous les détails sur nos produits,
svp veuillez consulter notre site www.hammondmfg.com

Data subject to change without notice. Isometric drawing not to scale.
Les données sont sujettes à changement sans préavis.

HAMMOND MANUFACTURING®

www.hammondmfg.com

RoHS

PART NO. **H1VFMC3052UBK**