BUD	PART NAME	EXTRUDED ALUMINUM ENCLOSURE	PART No.	EXT-9165	REVISION DATE	2/9/15

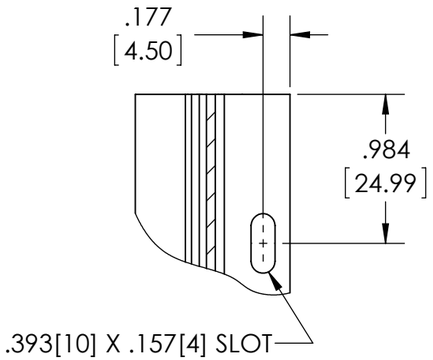

SECTION A-A
SCALE 1 : 1
4 PLACES

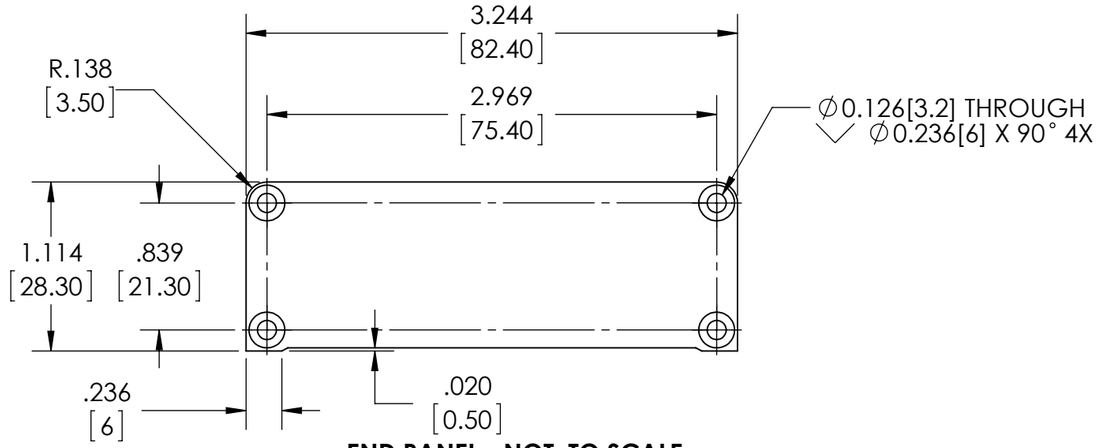

END PANEL - NOT TO SCALE

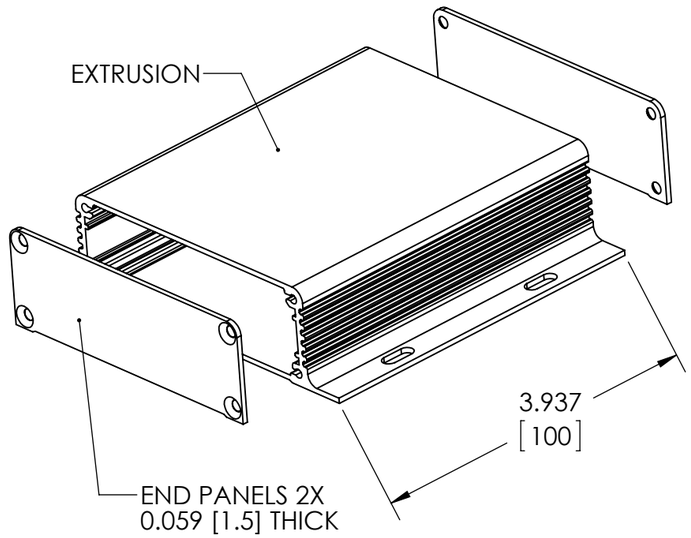

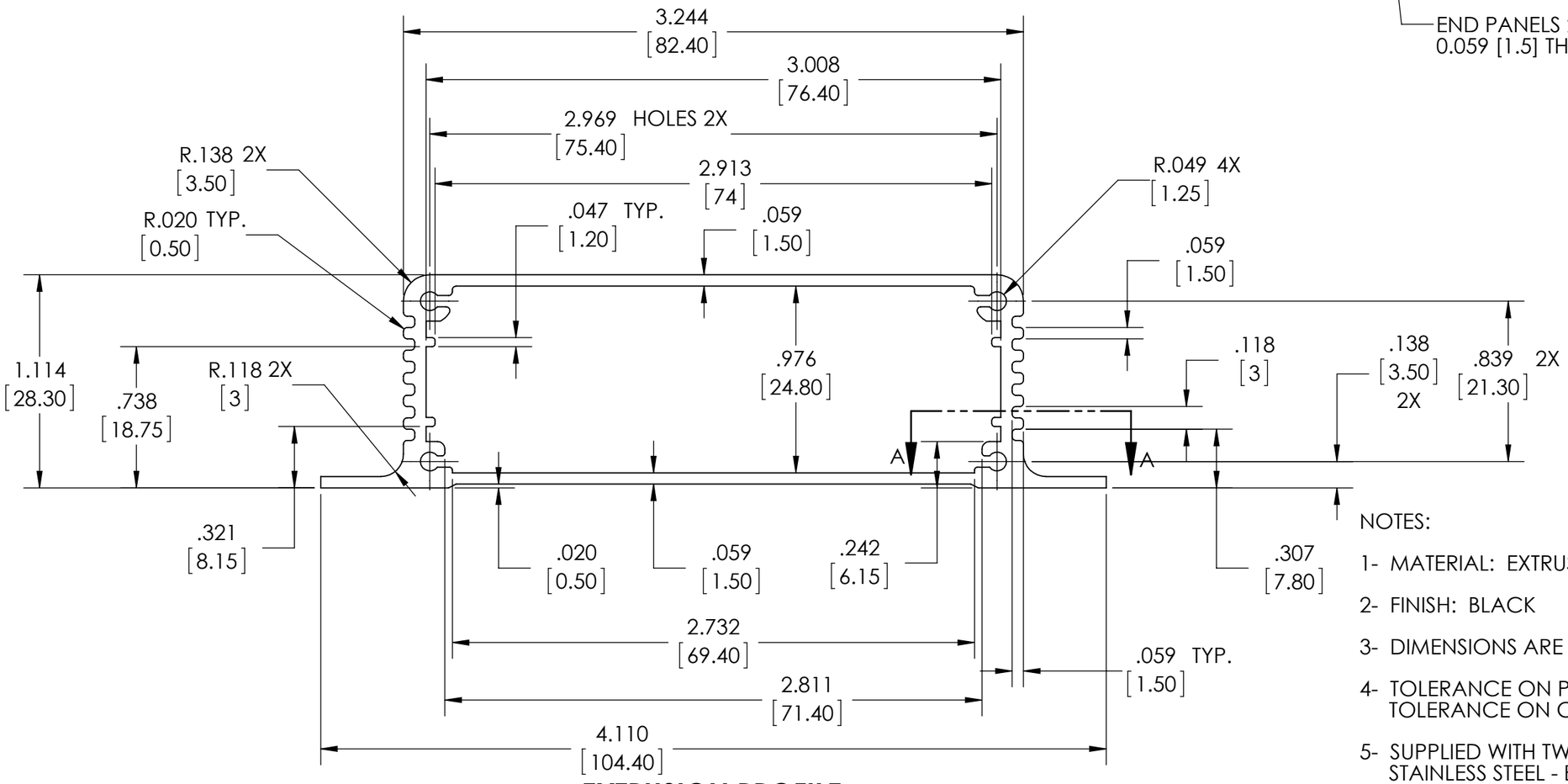

EXTRUSION PROFILE

NOTES:

1- MATERIAL: EXTRUSION/END PANELS - ALUMINUM

2- FINISH: BLACK

3- DIMENSIONS ARE INCH[MM]

4- TOLERANCE ON PROFILE/END PANELS = +/- .020[.50]
TOLERANCE ON CUT LENGTH = +/- .062[1.57]

5- SUPPLIED WITH TWO END PANELS AND EIGHT M3 X 10mm STAINLESS STEEL - BLACK ZINC PLATE - FLATHEAD PHILLIPS SCREWS FOR MOUNTING THE PANELS