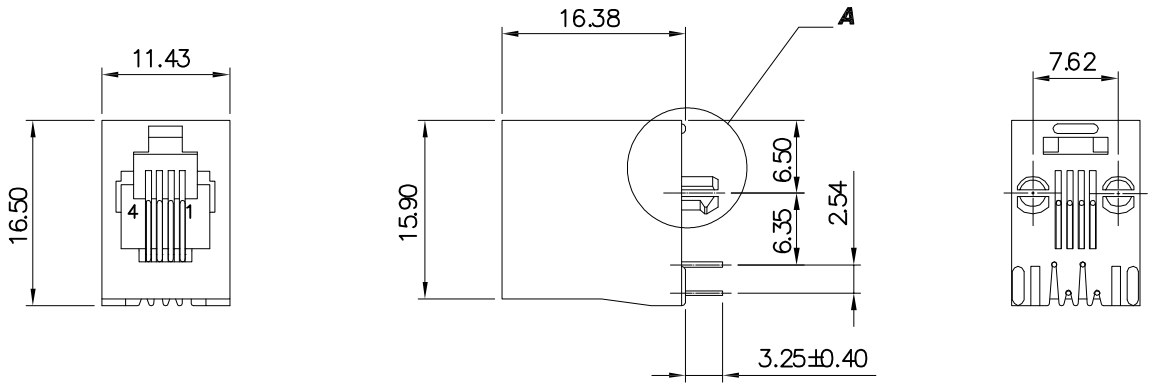

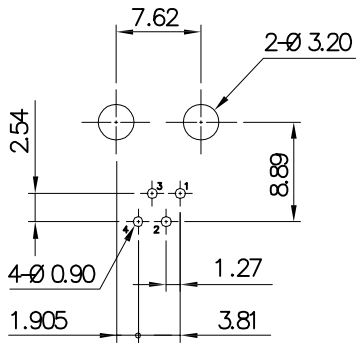

PCB LAYOUT
(Top View)

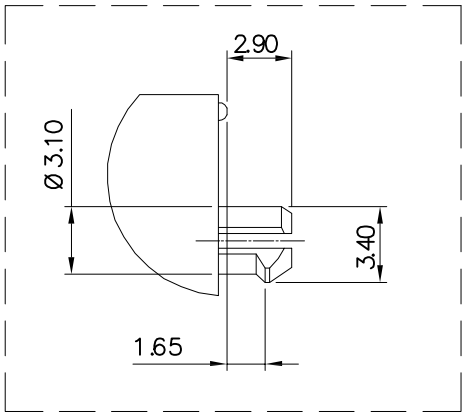

A(2:1)

Specification:

1. Electrical Char
   Insulation Resistance: 500MΩ min. 500V DC for 1 minute
   Contact Resistance: 20mΩ max.
   Rating Current: 1.5A max.
   Rating Voltage: 120V AC
   Dielectric Voltage: 1000 Vrms at 1MA 60 sec. min.

2. Physical Char
   Housing: PBT Glass filled (UL 94V-0) Color: Black
   Soldering Temperature: 235°C for 5 sec.
   Spring Wire: 0.45mm Dia Phosphor Bronze
   6u" Gold plating over Nickel
   Temperature Range: -40°C to +85°C
   Durability: 500 mating cycles min.

3. Packing: Tray

RoHS compliant
Unit:mm

Scale	Free						Date	Name	Customer-No.
TOLERANCE						Drawn	04.08.2016	Winnie	
.XX	±0.20					Approved	04.08.2016	Winnie	ASSMANN WSW-No. A-2014-3-4-N-T-R
.XXX	±0.13								
.XXXX	±0.05								
DIM	TOL								Drawing-No. ASS 7331 CO rev00
		0	Drawn	04.08.2016	Winnie				
Angle	+0°30'	Id.	Modification	Date	Name				Replace SHEET

ASSMANN WSW components