DRAWING MADE IN AMERICAN PROJECTION

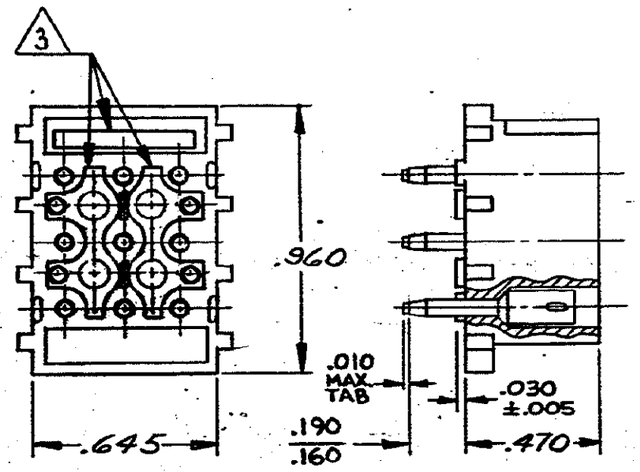

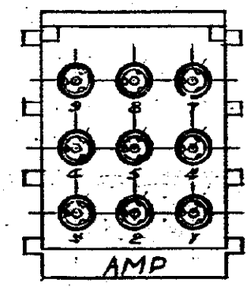

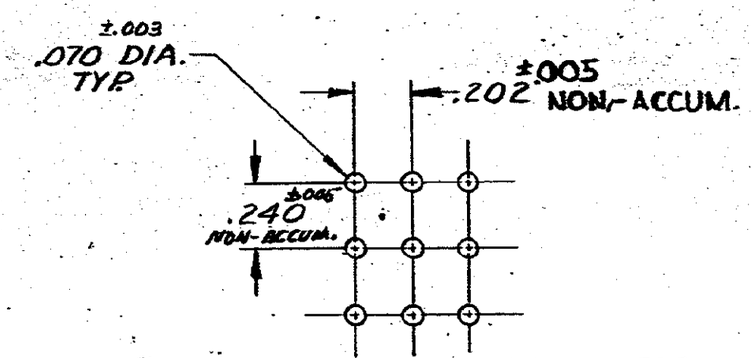

RECOMMENDED LAYOUT FOR
.062 THICK P.C. BOARD

1. MATES WITH HOUSING 480277.
2. PARTS COMPLY WITH AMP SOLDERABILITY SPEC. #109-11-3

3 OPTIONAL CORING

4. DIMENSION SHOWN REPRESENT PRODUCT IN DRY CONDITION. ADDITIONAL 2% GROWTH DUE TO END USE LOCATION MOISTURE ABSORPTION MAY OCCUR AND SHOULD BE ACCOUNTED FOR.

ASSEMBLY NO.	HSG. MATL & COLOR	PIN MATL & FINISH
350 642-1	NYLON - NATURAL	Phos BRZ - PRE-TIN

LTR	REVISION RECORD	DR	CHK	DATE
H2	REVISED PER ECR-21-117185	PJ	VS	20OCT2021
H1	ECR-11-003200	HMR	TM	16FEB11

NUMBER 350642

REQUIRED PER ASSEMBLY

DESCRIPTION

© 1973 BY AMP INCORPORATED. ALL RIGHTS RESERVED.
AMP PRODUCTS COVERED BY PATENTS AND/OR PATENTS PENDING.

CUSTOMER COPY
REFERENCE ONLY

DR 6-1-73
CHK 4-5-74
DE 4/5/74
APP 4/5/74

MATERIAL AND FINISH: SEE TABLE

WIRE — RANGE — INSULATION: # | #

TOLERANCE EXCEPT AS NOTED ±.015 ±1° 0'

SCALE #

TE Connectivity

CLASS #

TYPE #

LOC CM B NO 350642 H2

NAME 9 CIRCUIT MATE-N-LOK P.C. BOARD SOCKET HEADER

DIMENSIONS IN INCHES, DO NOT SCALE PRINT.

PRINT DIST E 53

AMP 1253 REV 11/65