3M™ SlimLine Twin Axial Cable Assembly (SFF-8654) for SAS and PCIe applications

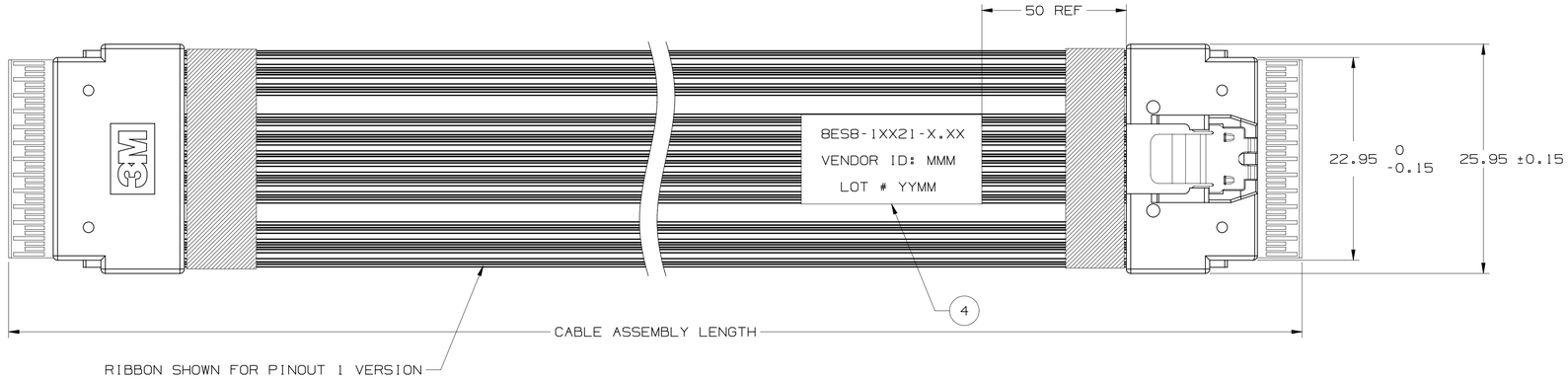

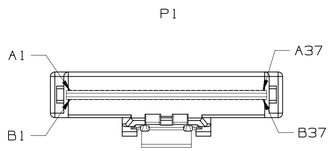

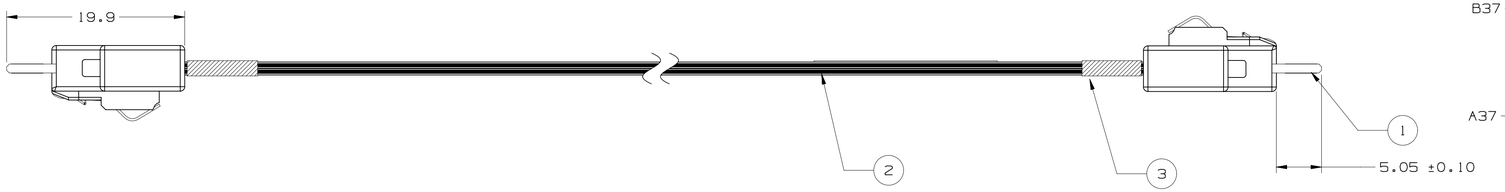

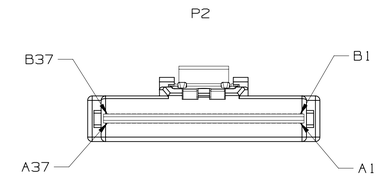

NOTES:

1. REGULATORY INFORMATION:
   VISIT 3M.com/regs OR CONTACT YOUR 3M REPRESENTATIVE TO FIND THE RoHS COMPLIANCE STATUS OF THE 3M PART YOU ARE INTERESTED IN.
2. PADDLECARD PLATING:
   30μ" MIN. GOLD PLATING
   50μ" MIN. NICKEL UNDERPLATING.
   P/N: 78-9102-4550-1 (8P+10SB)
   P/N: 78-9102-5348-9 (12P)
3. SLIMLINE CABLE PLUG DIMENSIONS ARE DESIGNED TO SFF-8654.
4. UNLESS OTHERWISE NOTED, REFERENCES TO INDUSTRY SPECIFICATIONS ARE INTENDED TO INDICATE SUBSTANTIAL COMPLIANCE TO THE MATERIAL ELEMENTS OF THE SPECIFICATION. SUCH REFERENCE SHOULD NOT BE CONSTRUED AS A GUARANTEE OF COMPLIANCE TO ALL REQUIREMENTS IN A GIVEN SPECIFICATION,
5. CLOTH TAPE WRAPPED AROUND CABLE RIBBONS AT BACK OF EACH CONNECTOR. ALSO, UP TO TWO ADDITIONAL TAPE PIECES WILL BE WRAPPED AROUND THE TWO CABLE RIBBONS SPACED EQUIDISTANT FROM THE CONNECTOR ENDS AND EACH OTHER, DEPENDING ON ASS'Y LENGTH (L):
   L <=0.2M: NO ADDITIONAL TAPE
   0.2M < L <= 0.6M: 1 TAPE WRAP
   0.6M < L <= 1.0M: 2 TAPE WRAP
6. PRODUCT SPECIFICATION: PS-240.
7. TWO RIBBONS OF 3M™ RIBBON TWIN AXIAL CABLE.
   PINOUT 1:
   SL8801/26-1JBK5-00
   85 OHM, 30AWG, 8PR, VW1
   10 SIDEBANDS, GND TUCKED-IN.

   PINOUT 2:
   SL8802/24-AJBN5-00
   85 OHM, 30AWG, 12PR, VW1
   GND TUCKED-IN.
8. THIS CABLE CONSTRUCTION HAS A THIN ALUMINUM LAYER AT EACH EDGE. USER SHOULD EVALUATE ITS USE IN THEIR APPLICATION AND, IF NECESSARY, INSULATING TAPE MAY BE APPLIED TO COVER THE ALUMINUM LAYER, AS USER DEEMS APPROPRIATE.
9. LENGTH TOLERANCE:
   ±6 MM FOR LENGTHS 0.125 TO 0.4 METERS,
   ±10 MM FOR LENGTHS 0.4 TO 1.0 METERS.

PINOUT 1

P1		P2
A1	GND	B1
A2	RX0+	B2
A3	RX0-	B3
A4	GND	B4
A5	RX1+	B5
A6	RX1-	B6
A7	GND	B7
A8	SB	B8
A9	SB	B9
A10	SB	B10
A11	SB	B11
A12	SB	B12
A13	GND	B13
A14	RX2+	B14
A15	RX2-	B15
A16	GND	B16
A17	RX3+	B17
A18	RX3-	B18
A19	GND	B19
A20	RX4+	B20
A21	RX4-	B21
A22	GND	B22
A23	RX5+	B23
A24	RX5-	B24
A25	GND	B25
A26	SB	B26
A27	SB	B27
A28	SB	B28
A29	SB	B29
A30	SB	B30
A31	GND	B31
A32	RX6+	B32
A33	RX6-	B33
A34	GND	B34
A35	RX7+	B35
A36	RX7-	B36
A37	GND	B37

P1		P2
B1	GND	A1
B2	TX0+	A2
B3	TX0-	A3
B4	GND	A4
B5	TX1+	A5
B6	TX1-	A6
B7	GND	A7
B8	SB	A8
B9	SB	A9
B10	SB	A10
B11	SB	A11
B12	SB	A12
B13	GND	A13
B14	TX2+	A14
B15	TX2-	A15
B16	GND	A16
B17	TX3+	A17
B18	TX3-	A18
B19	GND	A19
B20	TX4+	A20
B21	TX4-	A21
B22	GND	A22
B23	TX5+	A23
B24	TX5-	A24
B25	GND	AA5
B26	SB	A26
B27	SB	A27
B28	SB	A28
B29	SB	A29
B30	SB	A30
B31	GND	A31
B32	TX6+	A32
B33	TX6-	A33
B34	GND	A34
B35	TX7+	A35
B36	TX7-	A36
B37	GND	A37

PINOUT 2

P1		P2
A1	GND	B1
A2	RX0+	B2
A3	RX0-	B3
A4	GND	B4
A5	RX1+	B5
A6	RX1-	B6
A7	GND	B7
A8	SB+	B8
A9	SB-	B9
A10	GND	B10
A11	SB+	B11
A12	SB-	B12
A13	GND	B13
A14	RX2+	B14
A15	RX2-	B15
A16	GND	B16
A17	RX3+	B17
A18	RX3-	B18
A19	GND	B19
A20	RX4+	B20
A21	RX4-	B21
A22	GND	B22
A23	RX5+	B23
A24	RX5-	B24
A25	GND	B25
A26	SB+	B26
A27	SB-	B27
A28	GND	B28
A29	SB+	B29
A30	SB-	B30
A31	GND	B31
A32	RX6+	B32
A33	RX6-	B33
A34	GND	B34
A35	RX7+	B35
A36	RX7-	B36
A37	GND	B37

P1		P2
B1	GND	A1
B2	TX0+	A2
B3	TX0-	A3
B4	GND	A4
B5	TX1+	A5
B6	TX1-	A6
B7	GND	A7
B8	SB+	A8
B9	SB-	A9
B10	GND	A10
B11	SB+	A11
B12	SB-	A12
B13	GND	A13
B14	TX2+	A14
B15	TX2-	A15
B16	GND	A16
B17	TX3+	A17
B18	TX3-	A18
B19	GND	A19
B20	TX4+	A20
B21	TX4-	A21
B22	GND	A22
B23	TX5+	A23
B24	TX5-	A24
B25	GND	AA5
B26	SB+	A26
B27	SB-	A27
B28	GND	A28
B29	SB+	A29
B30	SB-	A30
B31	GND	A31
B32	TX6+	A32
B33	TX6-	A33
B34	GND	A34
B35	TX7+	A35
B36	TX7-	A36
B37	GND	A37

NOTE: ALL GND SIGNALS ARE TIED TOGETHER IN THE PADDLECARDS AT EACH END OF ASSEMBLY

8ES8-1XX2X-X.XX
VENDOR ID: MMM
LOT # YYMM

LABEL INFORMATION

ITEM	SPECIFICATION	QUANTITY
4	LABEL , PART NUMBER	1X
3	ACETATE TAPE	AS REQUIRED
2	TWIN AX CABLE , REFER TO NOTES	AS PER LENGTH
1	SLIMSAS PLUG STRAIGHT OR RIGHT ANGLE	2X

3M PART NUMBER : 8ES8-1XX2X-X.XX

AA- PINOUT 1
DF- PINOUT 2

1 - ST-ST Plug Assembly.
2 - RA-ST Plug Assembly.
3 - RA-RA Plug Assembly.

LENGTH IN METERS 0.125 TO 1.00.

REV	ECO	ISSUE DATE AND DESCRIPTION	DRFT	CHKD
C	81149	JAN 14,2019 CHANGE MIN. LENGTH	VT	VT
B	73021	APR 28,2017 ADD 12P ASSY.	RAO	RAO
A	69548	JAN 10,2017	RAO	RAO

DESIGN REFERENCE | NEXT ASSEMBLY

ACCESS CODES: US682 S0830a

DRFT Rao Vittapalli DATE AUG 23,2016 | MFG Liu JG DATE AUG 23,2016
CHKD Rao Vittapalli DATE AUG 23,2016 | APPD Sayjit Bandhu DATE AUG 23,2016

DIVISION | DIVISION CODE

DO NOT SCALE DRAWING | SCALE | TOLERANCES EXCEPT AS NOTED

THIRD ANGLE PROJECTION

INCHES .0 ± .00 ± .000 ± .0000 ±

INTERPRET PER ASME Y14.5 - 2009

MILLIMETERS 0 ±1 .0 ±.5 .00 ±.05 .000 ±.005

MAX SURFACE ROUGHNESS 125 ☐ ALL SURFACES ☒ MARKED ONLY

ANGLES ±1°

3M 3M Center St. Paul, MN 55144

© 3M COPYRIGHT 2019
This document and the information it contains are 3M property and may not be reproduced or further distributed without 3M permission, or used or disclosed other than for 3M authorized purposes. All rights reserved.

TITLE
CUSTOMER DRAWING
SLIMLINE 85 OHM X8
30AWG CABLE ASSY

CAGE NUMBER | SIZE D | DRAWING NO. 78-5100-2665-7 | REV. C

MODEL | DET LISTS ☐ YES ☒ NO | SHT 1 OF 2

78-5100-2665-7 DRAWING NUMBER | C REVISION

3M™ SlimLine Twin Axial Cable Assembly (SFF-8654) for SAS and PCIe applications

RA-ST Assembly.

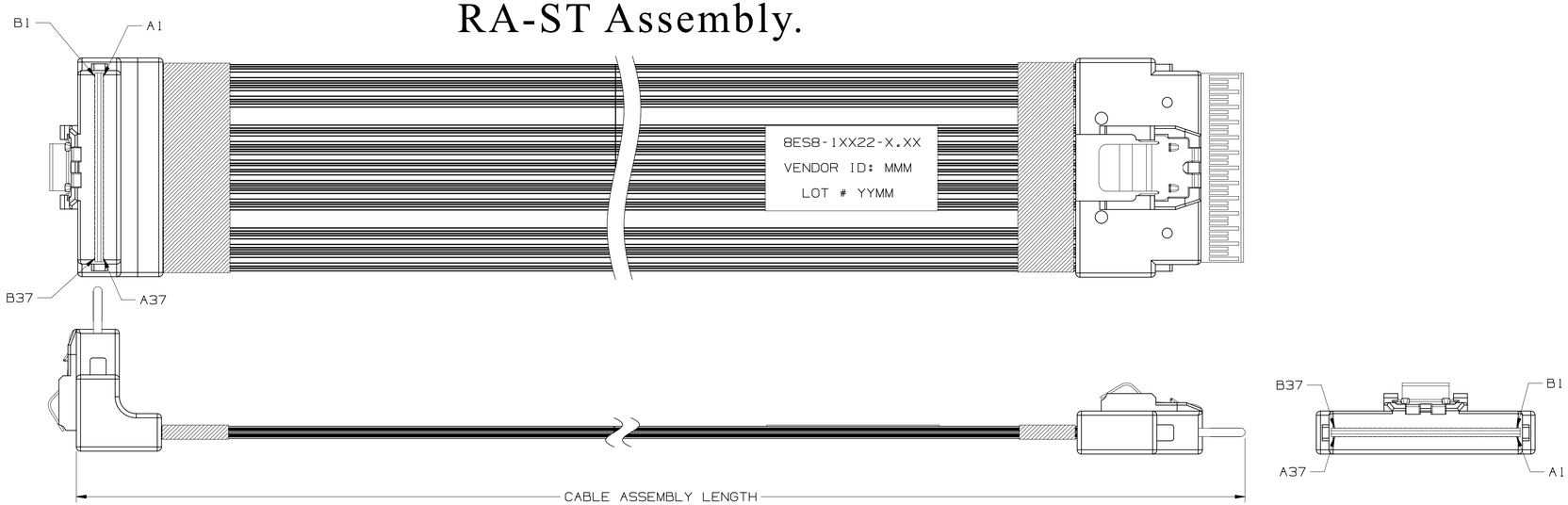

RA-RA Assembly.

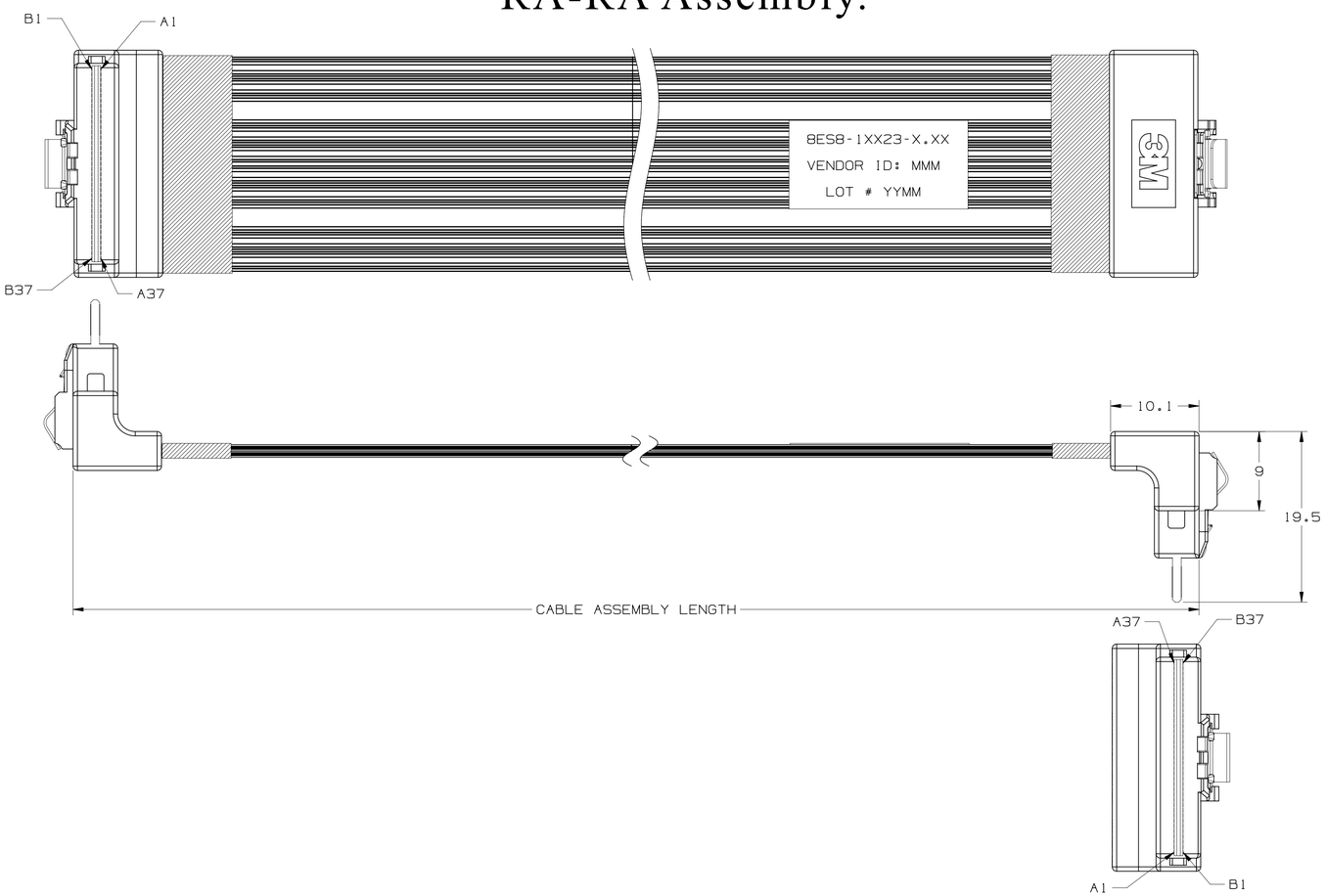

Technical Information: The technical information, recommendations and other statements contained in this document are based upon tests or experience that 3M believes are reliable, but the accuracy or completeness of such information is not guaranteed.

Product Use: Many factors beyond 3M's control and uniquely within user's knowledge and control can affect the use and performance of a 3M product in a particular application. Given the variety of factors that can affect the use and performance of a 3M product, user is solely responsible for evaluating the 3M product and determining whether it is fit for a particular purpose and suitable for user's method of application.

Warranty, Limited Remedy, and Disclaimer: Unless an additional warranty is specifically stated on the applicable 3M product packaging or product literature, 3M warrants that each 3M product meets the applicable 3M product specification at the time 3M ships the product. 3M MAKES NO OTHER WARRANTIES OR CONDITIONS, EXPRESS OR IMPLIED, INCLUDING, BUT NOT LIMITED TO, ANY IMPLIED WARRANTY OR CONDITION OF MERCHANTABILITY OR FITNESS FOR A PARTICULAR PURPOSE OR ANY IMPLIED WARRANTY OR CONDITION ARISING OUT OF A COURSE OF DEALING, CUSTOM OR USAGE OF TRADE. If the 3M product does not conform to this warranty, then the sole and exclusive remedy is, at 3M's option, replacement of the 3M product or refund of the purchase price.

Limitation of Liability: Except where prohibited by law, 3M will not be liable for any loss or damage arising from the 3M product, whether direct, indirect, special, incidental or consequential, regardless of the legal theory asserted, including warranty, contract, negligence or strict liability.

REV	ECO	ISSUE DATE AND DESCRIPTION	DRFT	CHKD
C	81149	JAN 14,2019 CHANGE MIN. LENGTH	VT	VT
B	73021	APR 28,2017 ADD 12P ASSY.	RAO	RAO
A	69548	JAN 10,2017	Rao	Rao

DESIGN REFERENCE | NEXT ASSEMBLY

ACCESS CODES: US682 | S0830a

DRFT Rao Vittapalli	DATE AUG 23,2016	MFG Liu JG	DATE AUG 23,2016
CHKD Rao Vittapalli	DATE AUG 23,2016	APPVL Sayjit Bandhu	DATE AUG 23,2016

DIVISION | DIVISION CODE

DO NOT SCALE DRAWING | SCALE

TOLERANCES EXCEPT AS NOTED
INCHES
.0 ±
.00 ±
.000 ±
.0000 ±
MILLIMETERS
0 ±1
.0 ±.5
.00 ±.05
.000 ±.005
ANGLES ±1°

THIRD ANGLE PROJECTION

INTERPRET PER ASME Y14.5 - 2009

MAX SURFACE ROUGHNESS 125 √ ☐ ALL SURFACES ☒ MARKED ONLY

3M Center St. Paul, MN 55144
© 3M COPYRIGHT 2019
This document and the information it contains are 3M property and may not be reproduced or further distributed without 3M permission, or used or disclosed other than for 3M authorized purposes. All rights reserved.

TITLE
CUSTOMER DRAWING
SLIMLINE 85 OHM X8
30AWG CABLE ASSY

CAGE NUMBER | SIZE D | DRAWING NO. 78-5100-2665-7 | REV. C

MODEL | DET. LISTS ☐ YES ☒ NO | SHT 2 OF 2

78-5100-2665-7 (DRAWING NUMBER) C (REVISION)