used for: DIN EN 60603 TYPE "B"

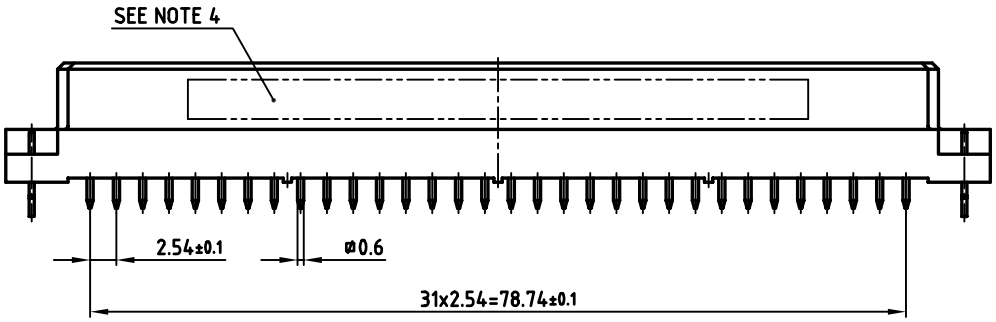

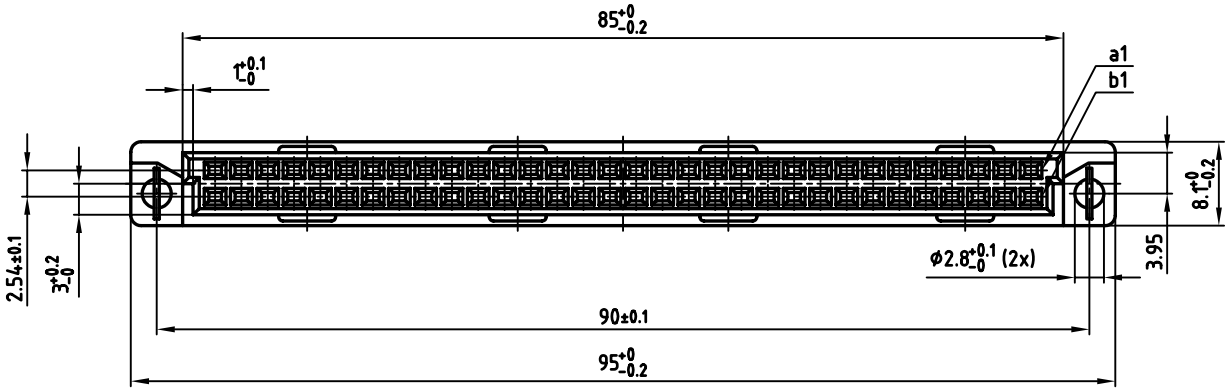

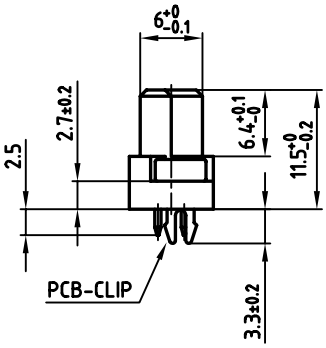

Directive 2002/95/EC „RoHS" Compliant

NOTES:

1. INSULATORS: PBTP UL 94 V-0, GREY
2. CONTACTS: COPPER ALLOY
   PLATING: GOLD OVER NICKEL
   50 MATING CYCLES
3. PCB-CLIP: COPPER ALLOY
   PCB HOLE ø2.6+0.1 / PCB THICKNESS t=1.6mm
4. CONNECTOR IS PART MARKED: 122A13209X CONEC ABC

P.C.B. HOLE DRILLINGS

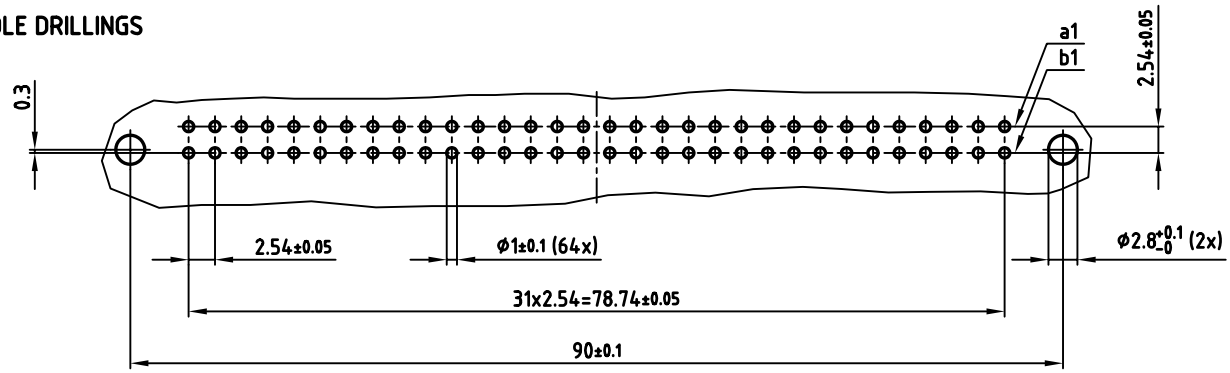

APPROVAL # FREIGABE # DEBLOCAGE # AUTOR/ZACION # APPROVAL

CUSTOMER APPROVAL DATE:

NAME: TITLE:

COMPANY NAME:

APPROVAL # FREIGABE # DEBLOCAGE # AUTOR/ZACION # APPROVAL

THIS DRAWING MAY NOT BE COPIED OR REPRODUCED IN ANY WAY, AND MAY NOT BE PASSED ON TO A THIRD PARTY WITHOUT WRITTEN PERMISSION. OWNERSHIP AND COPYRIGHT OF CONEC GmbH

DO NOT ALTER CAD DRAWING BY HAND

rev.	description	date	name

tolerance

dim. in mm

2005	date	name
drawn	21.10.	Lehmenkühler
appd.	21.10.	Mickenbecker
norm	DIN EN 60603	
d-old		

CONEC®

scale: 2:1

material: SEE NOTES

title:

FEMALE CONNECTOR TYPE "B"

64pos. SOLDER PIN 2.5mm

with clip

dwg no: 12K1A400

AutoCAD 2004 | DIN-A 3 | sh: 1/1

part no: 122A13209X