WIRING DIAGRAM

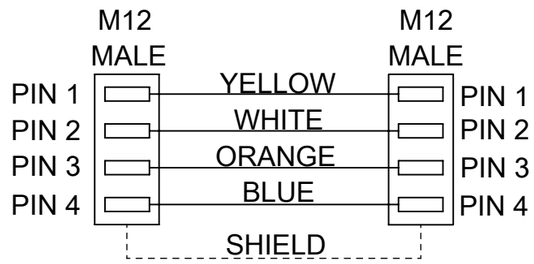

PART No MATRIX

E	1	1	A	0	6	0	1	2	M	X	X	X	X
													OPTIONS

- E=ETHERNET
- HEADS
  1 = M12 D-Coding
  1 = M12 D-Coding
- WIRING TYPE:
  A=4 Pole
  (STRAIGHT WIRED)
- HEADS STYLE:
  060 = MALE STR / MALE STR
- CABLE TYPE
  SEE CABLE TABLE
- UNITS :
  M= METER
  T=10x METER
- LENGTH EXAMPLES:
  005=0.5
  010=1
  150=15
- OPTIONS: H=2 PCS. OF I/D Carrier

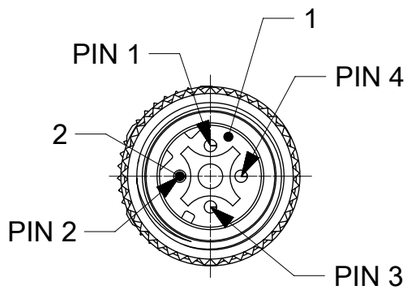

VIEW FROM THE FRONT SIDE
SCALE 2:1

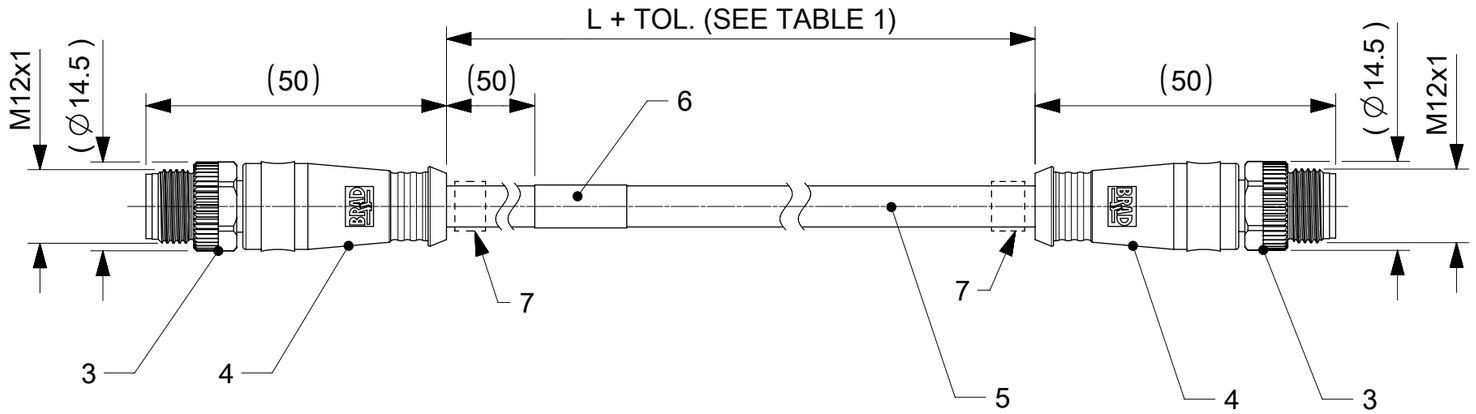

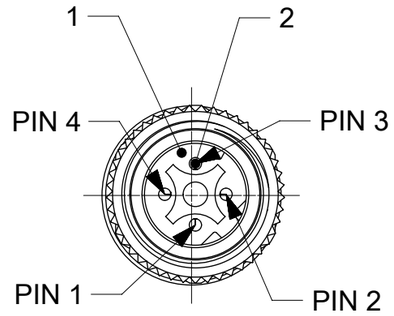

VIEW FROM THE FRONT SIDE
SCALE 2:1

CABLE SPECIFICATION :(FOR MORE DETAILS SEE CABLE SPECIFICATION SHEET)

CABLE TYPE	WIRE GAUGE	CABLE JACKET	UL	CSA	STATIC	FLEXING	DRAG CHAIN TESTED	OTHER
CAB-12 4P(12)	0.34mm²	TPU GREEN	STYLE 21215	YES	-40°C TO +80°C >5xO.D.	-20°C TO +60°C >15xO.D.	2 mio CYCLES	WELD SLAG RESISTANCE

CONNECTOR SPECIFICATION :
VOLTAGE RATING : MAX. 30V
AMPERAGE RATING : 1.5A
PROTECTION : IP67
OPERATING TEMPERATURE : SEE CABLE TYPE

BOM (ID CARRIER APPLICABLE, IF ENGINEERING NO. HAS "H" {SEE PART LIST})

ITEM	QTY.	DESCRIPTION	MATERIAL	FINISH/COLOR
1	2	INSERT	PUR	BLACK
2	8	PIN CONTACT	COPPER ALLOY	GOLD OVER NICKEL PLATED
3	2	COUPLING NUT	BRASS	NICKEL PLATED
4	-	OVERMOULD	TPU	BLACK
5	-	CABLE	TPU	GREEN
6	1	LABEL	VINYL	YELLOW
7	SEE PN MATRIX	ID CARRIER	PVC	TRANSPARENT

DOCUMENT STATUS	P1	RELEASE DATE	2021/09/13 14:20:58

TABLE 1

CABLE LENGTH TOLERANCES	
LENGTH	TOLERANCE
0m-1m	+40 mm
>1m-5m	+60 mm
>5m-10m	+80 mm
>10m-20m	+140 mm
>20m-30m	+160 mm
>30m	+1% length

FUNCTIONAL SYMBOLS: FA = 0, FC = 0, FP = 0
DIVISIONAL SYMBOLS

THIS DRAWING CONTAINS INFORMATION THAT IS PROPRIETARY TO MOLEX ELECTRONIC TECHNOLOGIES, LLC AND SHOULD NOT BE USED WITHOUT WRITTEN PERMISSION

DIMENSION UNITS	SCALE
mm	1:1

GENERAL TOLERANCES (UNLESS SPECIFIED)

ANGULAR TOL	±	1.0 °
4 PLACES	±	
3 PLACES	±	
2 PLACES	±	0.05
1 PLACE	±	0.3
0 PLACES	±	0.5

DRAFT WHERE APPLICABLE MUST REMAIN WITHIN DIMENSIONS

CURRENT REV DESC: ADDED NEW PNS

EC NO: 677462
DRWN: SSM 2021/07/28
CHK'D: RSILLER 2021/09/13
APPR: RSILLER 2021/09/13

INITIAL REVISION:
DRWN: BBRAUCH 2014/10/16
APPR: CBURGER 2014/10/16

THIRD ANGLE PROJECTION

DRAWING	SERIES
A3-SIZE	120108

molex

CSE M12 ETH 4P DC MA
STR WSOR XM DE

PRODUCT CUSTOMER DRAWING

DOCUMENT NUMBER	DOC TYPE	DOC PART	REVISION
SD-120108-072	PSD	001	A4

MATERIAL NUMBER	CUSTOMER	SHEET NUMBER
SEE SHEET 2	GENERAL MARKET	1 OF 2

FORMAT: master_sheet-A3
REVISION: J1
DATE: 2020/01/14

PART LIST

MOLEX PN	ENGINEERING NO	L+Tol.[mm]
1201088303	E11A06012M005	500
1201088304	E11A06012M010	1000
1201088305	E11A06012M020	2000
1201088653	E11A06012M025	2500
1201088306	E11A06012M030	3000
1201088384	E11A06012M035	3500
1201088307	E11A06012M040	4000
1201088308	E11A06012M050	5000
1201088309	E11A06012M060	6000
1201088310	E11A06012M080	8000
1201088311	E11A06012M100	10000
1201088312	E11A06012M120	12000
1201088313	E11A06012M150	15000
1201088314	E11A06012M180	18000
1201088315	E11A06012M200	20000
1201088507	E11A06012M230	23000
1201088316	E11A06012M250	25000
1201088508	E11A06012M270	27000
1201088317	E11A06012M300	30000
1201088318	E11A06012M350	35000
1201088319	E11A06012M400	40000
1201088320	E11A06012M450	45000
1201088321	E11A06012M500	50000
1201088322	E11A06012M550	55000
1201088323	E11A06012M600	60000
1201088324	E11A06012M650	65000
1201088325	E11A06012M700	70000
1201088326	E11A06012M750	75000
1201088327	E11A06012M800	80000
1201088328	E11A06012M850	85000
1201088714	E11A06012M900	90000
1201088715	E11A06012M950	95000

MOLEX PN	ENGINEERING NO	L+Tol.[mm]
WITH ID CARRIER		
1201088801	E11A06012M003H	300
1201088402	E11A06012M002H	200
1201088403	E11A06012M005H	500
1201088404	E11A06012M010H	1000
1201088405	E11A06012M020H	2000
1201088807	E11A06012M025H	2500
1201088406	E11A06012M030H	3000
1201088806	E11A06012M035H	3500
1201088805	E11A06012M040H	4000
1201088407	E11A06012M050H	5000
1201088800	E11A06012M045H	4500
1201088669	E11A06012M060H	6000
1201088985	E11A06012M060H	6000
1201088804	E11A06012M065H	6500
1201088907	E11A06012M070H	7000
1201088536	E11A06012M080H	8000
1201088803	E11A06012M090H	9000
1201088408	E11A06012M100H	10000
1201088802	E11A06012M110H	11000
1201088941	E11A06012M120H	12000
1201088589	E11A06012M130H	13000
1201088409	E11A06012M150H	15000
1201088590	E11A06012M180H	18000
1201088410	E11A06012M200H	20000
1201088591	E11A06012M230H	23000
1201088411	E11A06012M250H	25000
1201088412	E11A06012M300H	30000
1201088987	E11A06012M350H	35000
1201088413	E11A06012M400H	40000
1201088988	E11A06012M450H	45000
1201088414	E11A06012M500H	50000
1201088939	E11A06012M550H	55000
1201088415	E11A06012M600H	60000
1201088940	E11A06012M650H	65000
1201088416	E11A06012M700H	70000
1201088989	E11A06012M750H	75000
1201088990	E11A06012M800H	80000
1201088417	E11A06012M900H	90000

THIS DRAWING CONTAINS INFORMATION THAT IS PROPRIETARY TO MOLEX ELECTRONIC TECHNOLOGIES, LLC AND SHOULD NOT BE USED WITHOUT WRITTEN PERMISSION

FUNCTIONAL SYMBOLS: FA = 0, FC = 0, FP = 0
DIVISIONAL SYMBOLS

DIMENSION UNITS	SCALE
mm	1:1

GENERAL TOLERANCES (UNLESS SPECIFIED)

ANGULAR TOL	±	1.0 °
4 PLACES	±	
3 PLACES	±	
2 PLACES	±	0.05
1 PLACE	±	0.3
0 PLACES	±	0.5

DRAFT WHERE APPLICABLE MUST REMAIN WITHIN DIMENSIONS

CURRENT REV DESC: ADDED NEW PNS

EC NO: 677462
DRWN: SSM 2021/07/28
CHK'D: RSILLER 2021/09/13
APPR: RSILLER 2021/09/13

INITIAL REVISION:
DRWN: BBRAUCH 2014/10/16
APPR: CBURGER 2014/10/16

THIRD ANGLE PROJECTION

molex

CSE M12 ETH 4P DC MA
STR WSOR XM DE

PRODUCT CUSTOMER DRAWING

DOCUMENT NUMBER	DOC TYPE	DOC PART	REVISION
SD-120108-072	PSD	001	A4

DRAWING	SERIES	MATERIAL NUMBER	CUSTOMER	SHEET NUMBER
A3-SIZE	120108	SEE PART LIST	GENERAL MARKET	2 OF 2

DOCUMENT STATUS	P1	RELEASE DATE	2021/09/13 14:20:58

FORMAT: master_dwg-A3
REVISION: J1
DATE: 2020/01/14