THIS DRAWING IS UNPUBLISHED. RELEASED FOR PUBLICATION -,- .
© COPYRIGHT 2011 BY TYCO ELECTRONICS CORPORATION. ALL RIGHTS RESERVED.

| LOC | DIST |
|---|---|
| DW | — |

REVISIONS

| P | LTR | DESCRIPTION | DATE | DWN | APVD |
|---|---|---|---|---|---|
| | A | RELEASED. | 01JUN'11 | J.C. | W.K. |

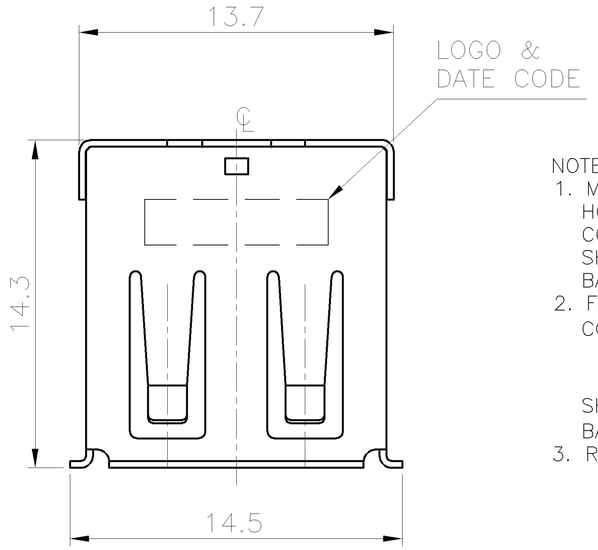


NOTE:
1. MATERIAL:
   HOUSING: PA9T WITH 30%GF, UL 94V-0, BLACK COLOR.
   CONTACT: PHOSPHOR BRONZE.
   SHELL: BRASS.
   BACK COVER: BRASS.
2. FINISH:
   CONTACT: 0.762μm [30μ"] MIN. GOLD PLATING ON CONTACT AREA,
   2.54μm [100μ"] MIN. BRIGHT TIN PLATING ON SOLDERTAILS.
   1.27μm [50μ"] MIN. NICKEL UNDERPLATING OVERALL.
   SHELL: 0.762μm [30μ"] MIN. NICKEL PLATING OVERALL
   BACK COVER: 0.762μm [30μ"] MIN. NICKEL PLATING OVERALL
3. REFLOW SOLDER CAPABLE TO 260°C PER TE SPEC 109-201, CONDITION B.

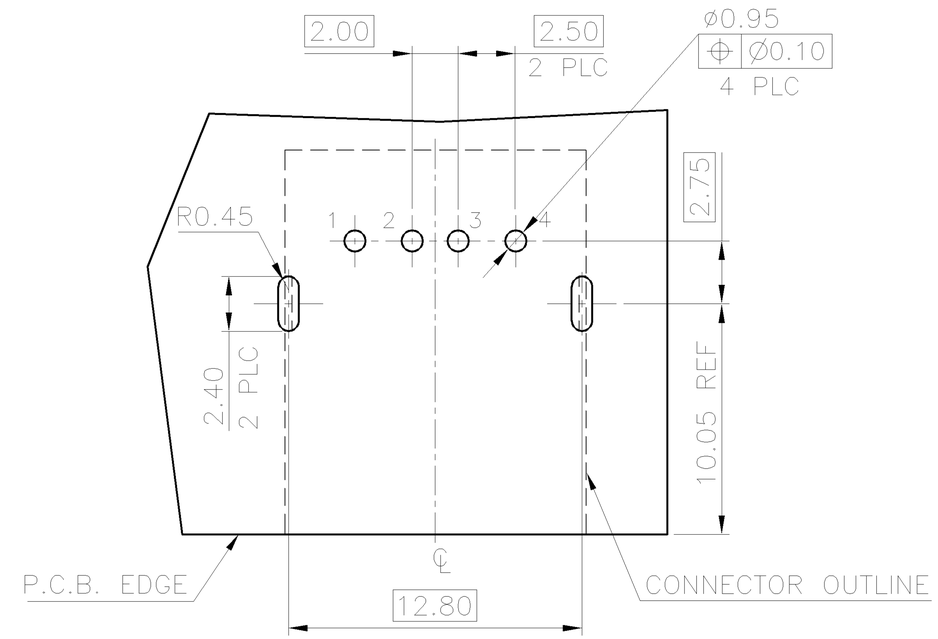


RECOMMEND P.C.B LAYOUT (THICKNESS=3.0mm)
(COMPONENT SIDE) TOLERANCE: ±0.05

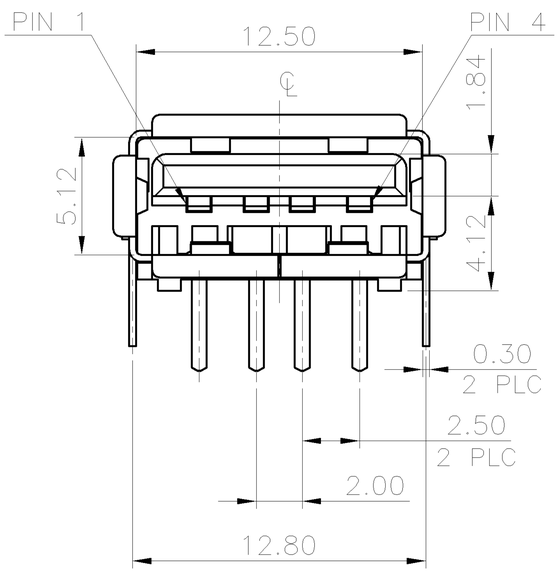


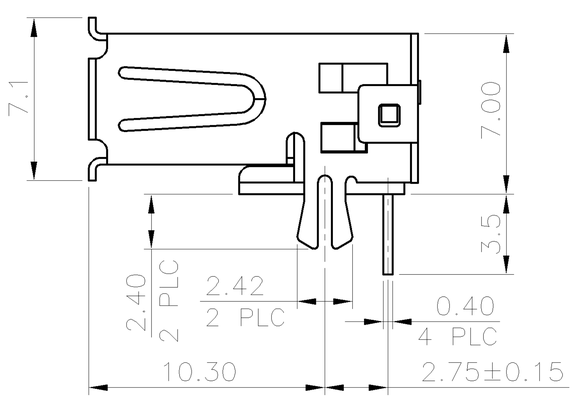


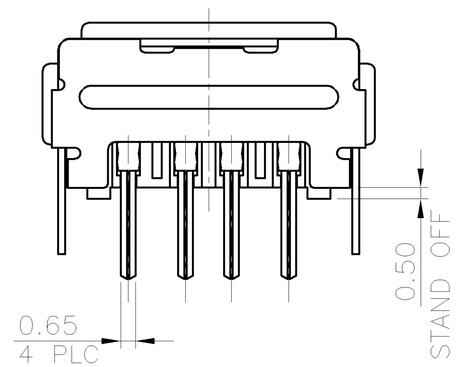


| TAPE & REEL | 2041386-1 |
|---|---|
| PACKAGE | PART NUMBER |

THIS DRAWING IS A CONTROLLED DOCUMENT.

DIMENSIONS: mm

TOLERANCES UNLESS OTHERWISE SPECIFIED:

| | |
|---|---|
| 0 PLC | ± – |
| 1 PLC | ± 0.35 |
| 2 PLC | ± 0.25 |
| 3 PLC | ± 0.15 |
| 4 PLC | ± – |
| ANGLES | ± 3° |

MATERIAL: SEE NOTE

FINISH: SEE NOTE

DWN J. CHEN 01JUN2011
CHK S. CHIEN 01JUN2011
APVD W. KODAMA 01JUN2011

PRODUCT SPEC: 108-57505

APPLICATION SPEC: —

WEIGHT: 1.95 GRAMS

CUSTOMER DRAWING

TE Connectivity

NAME: USB CONNECTOR, RECEPTACLE
4 POSITION, SERIES A, DIP, 7.0H

| SIZE | CAGE CODE | DRAWING NO | RESTRICTED TO |
|---|---|---|---|
| A3 | 00779 | C-2041386 | — |

| SCALE | SHEET | REV |
|---|---|---|
| — | 1 OF 2 | A |

THIS DRAWING IS UNPUBLISHED. RELEASED FOR PUBLICATION -,- .
© COPYRIGHT 2011 BY TYCO ELECTRONICS CORPORATION. ALL RIGHTS RESERVED.

| LOC | DIST |
|---|---|
| DW | — |

REVISIONS

| P | LTR | DESCRIPTION | DATE | DWN | APVD |
|---|---|---|---|---|---|
| | | SEE SHEET 1. | | | |

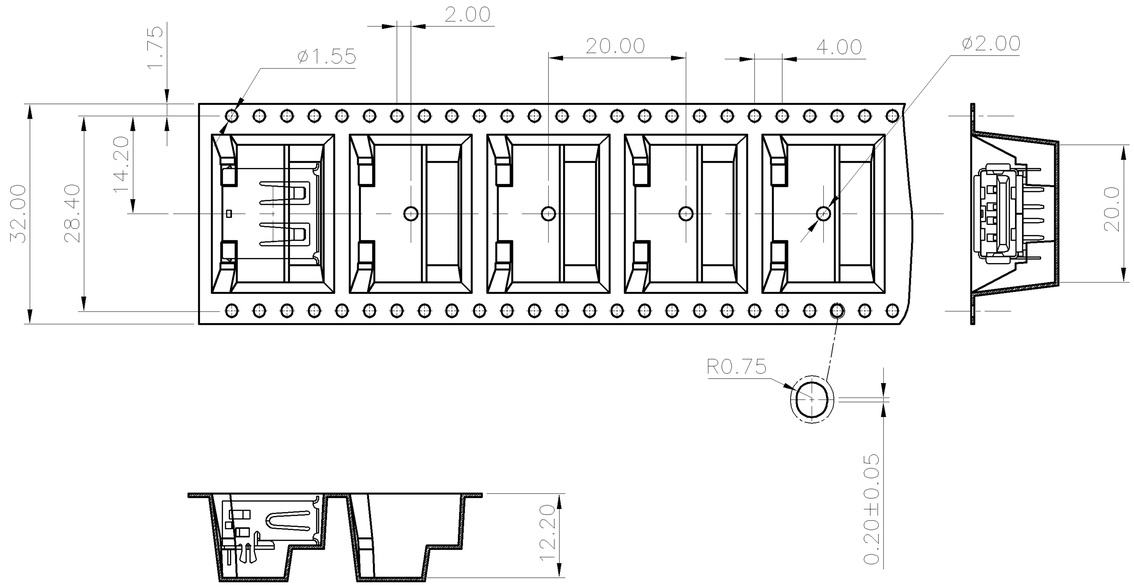


NOTE:
1. MATERIAL :
   COVER TAPE : PET.
   CARRIER TAPE : PS.
   REEL : PS.
   SHIPPING BOX: CORRUGATED FIBER
2. DIMENSION:
   SHIPPING CARTON: L=350mm, W=350mm, H=350mm
3. PEELING RESISTANCE : 10gf~130gf (for 12mm~56mm)
4. PEELING SPEED : 300mm/MINUTES

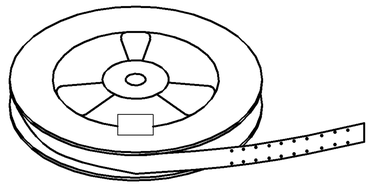

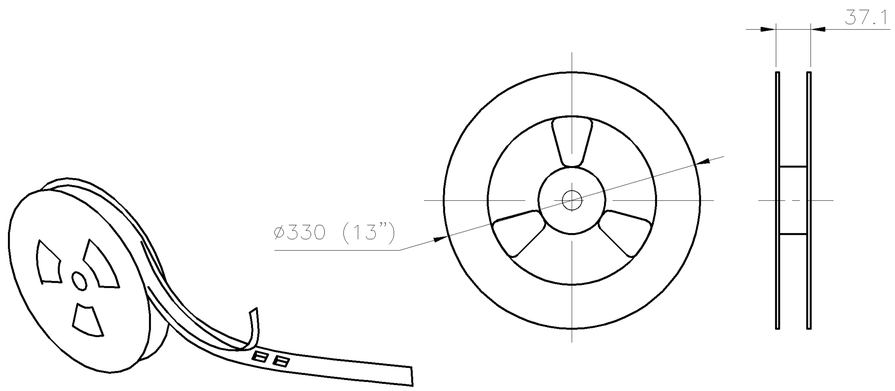


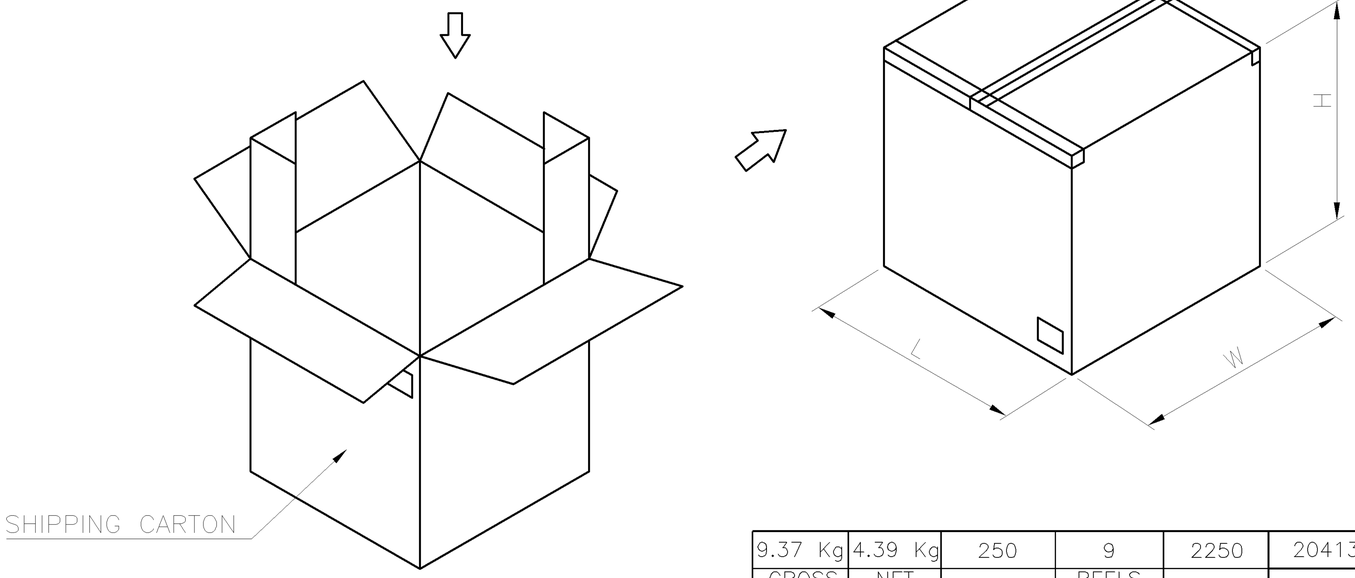


| 9.37 Kg | 4.39 Kg | 250 | 9 | 2250 | 2041386-1 |
|---|---|---|---|---|---|
| GROSS WEIGHT | NET WEIGHT | PCS/REEL | REELS /CARTON | QUANTITY | PART NUMBER |

THIS DRAWING IS A CONTROLLED DOCUMENT.

DIMENSIONS: mm

TOLERANCES UNLESS OTHERWISE SPECIFIED:
0 PLC ± –
1 PLC ± –
2 PLC ± –
3 PLC ± –
4 PLC ± –
ANGLES ± –

MATERIAL –
FINISH –

DWN –
CHK –
APVD –
PRODUCT SPEC –
APPLICATION SPEC –
WEIGHT –

TE Connectivity

NAME
USB CONNECTOR, RECEPTACLE
4 POSITION, SERIES A, DIP, 7.0H

| SIZE | CAGE CODE | DRAWING NO | RESTRICTED TO |
|---|---|---|---|
| A3 | 00779 | C-2041386 | — |

CUSTOMER DRAWING | SCALE — | SHEET 2 OF 2 | REV A

1470-19 (1/08)