THIS DRAWING IS UNPUBLISHED. RELEASED FOR PUBLICATION -.- .
© COPYRIGHT - By - ALL RIGHTS RESERVED.

LOC	DIST
AA	22

REVISIONS

P	LTR	DESCRIPTION	DATE	DWN	APVD
	A	ECR-14-009311	20JUN2014	CW	SH

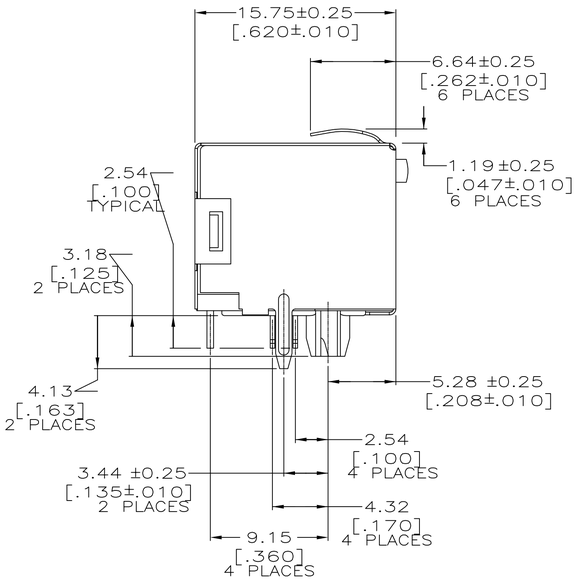

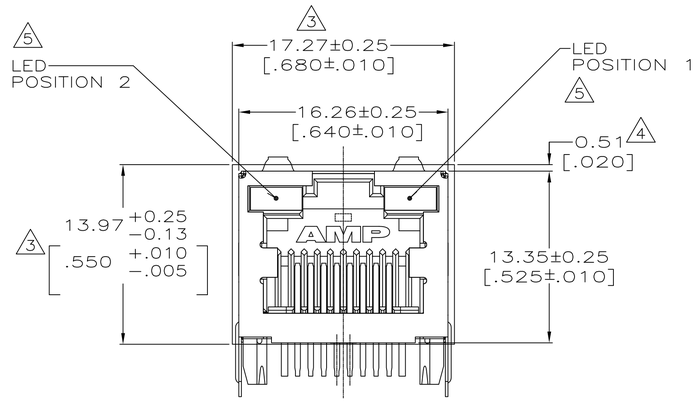

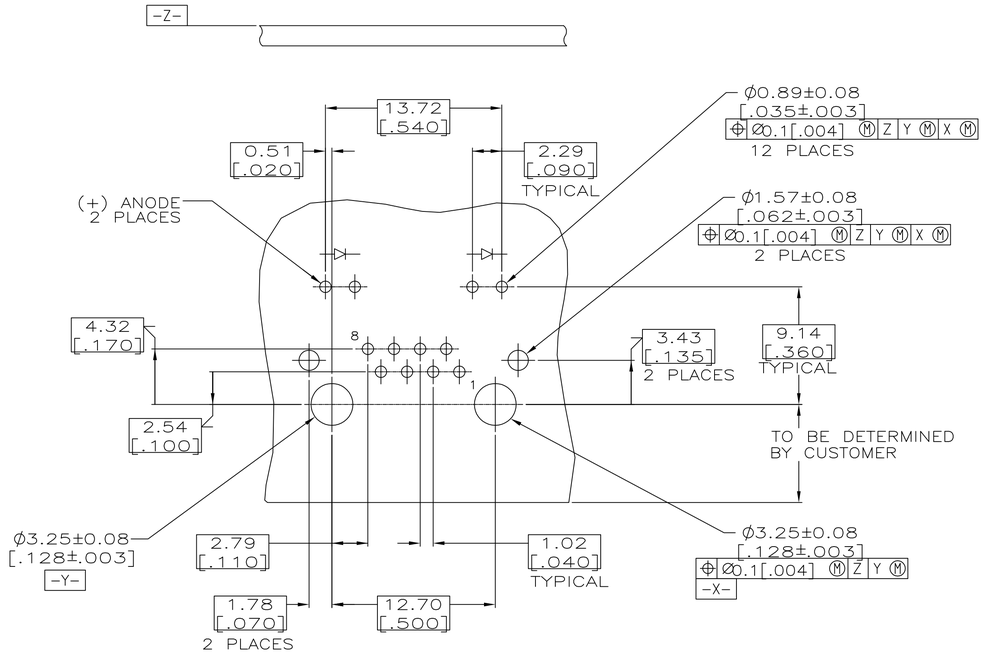

SUGGESTED PRINTED CIRCUIT BOARD LAYOUT
(COMPONENT SIDE)

1. MATERIAL: HOUSING – HIGH TEMPERATURE NYLON, HEAT DEFLECTION TEMPERATURE RATING 278° C [532° F] AT 1.8MPA [264 PSI], BLACK, UL94V-O.
TERMINALS – 0.36[.014] THICK PHOS BRONZE PLATED WITH 3.81μm[.000150] MINIMUM THICK TIN IN SOLDER AREA,1.27μm [.000050] MINIMUM GOLD IN LOCALIZED PLATE AREA.
ENTIRE TERMINAL PLATED WITH 1.27μm [.000050] MINIMUM THICK NICKEL.
SHIELD – 0.196[.0077] THICK COPPER ZINC ALLOY PREPLATED WITH 1.27μm[.000050] MINIMUM SATIN NICKEL WITH 2.03μm[.000080] MINIMUM SnAgCu POST DIPPED ON PCB GROUND TABS.
LIGHT EMITTING DIODE (LED) – DIFFUSED EPOXY LENS, 0.51 x 0.51[.020 x .020] CARBON STEEL WIREFRAME LEADS PREPLATED WITH 2.29μm[.000090] SILVER OVER 1.02μm[.000040] NICKEL UNDERPLATE OVER 2.03μm[.000080] COPPER UNDERPLATE.
2. POST-PLATED WITH 6.35μm [.000250] MINIMUM TIN.
LEDS NOT DESIGNED FOR IR REFLOW SOLDERING.

3. JACK CAVITY CONFORMS TO FCC RULES AND REGULATIIONS PART 68, SUBPART F.

4. SUGGESTED PANEL OPENING DIMENSIONS.

5. SUGGESTED CLEARANCE BETWEEN TOP OF CONNECTOR AND TOP PANEL OPENING.

SEE TABLE FOR COLOR OF LEDS AND NUMBER REQUIRED.

6. TRAY PACKAGED.

7. TYPE&REEL PACKAGED PER EIA 481 REV D.

PACKAGE	INDICATOR COLOR		PART NUMBER
	POSITION 2	POSITION 1	
7	GREEN	YELLOW	6116615-6
6	GREEN	GREEN	6116615-5
	GREEN	YELLOW	6116615-4

THIS DRAWING IS A CONTROLLED DOCUMENT.

DIMENSIONS: INCHES

TOLERANCES UNLESS OTHERWISE SPECIFIED:
0 PLC ± –
1 PLC ± –
2 PLC ± 0.25[.01]
3 PLC ± 0.13[.005]
4 PLC ± –
ANGLES ± –

MATERIAL 1
FINISH 1

DWN B KUHNLY 14OCT2004
CHK B KUHNLY 14OCT2004
APVD S FLICKINGER 14OCT2004
PRODUCT SPEC 108-1163-4
APPLICATION SPEC 114-2154
WEIGHT –

TE Connectivity

NAME INVERTED MODULAR JACK ASSEMBLY, 1X1, SHIELDED, TOP PANEL GROUNDS, LEDS, TIN PLATED SOLDERTAILS

SIZE A1 | CAGE CODE 00779 | DRAWING NO C-6116615 | RESTRICTED TO –

CUSTOMER DRAWING | SCALE 4:1 | SHEET 1 OF 1 | REV A

4805 (3/11)