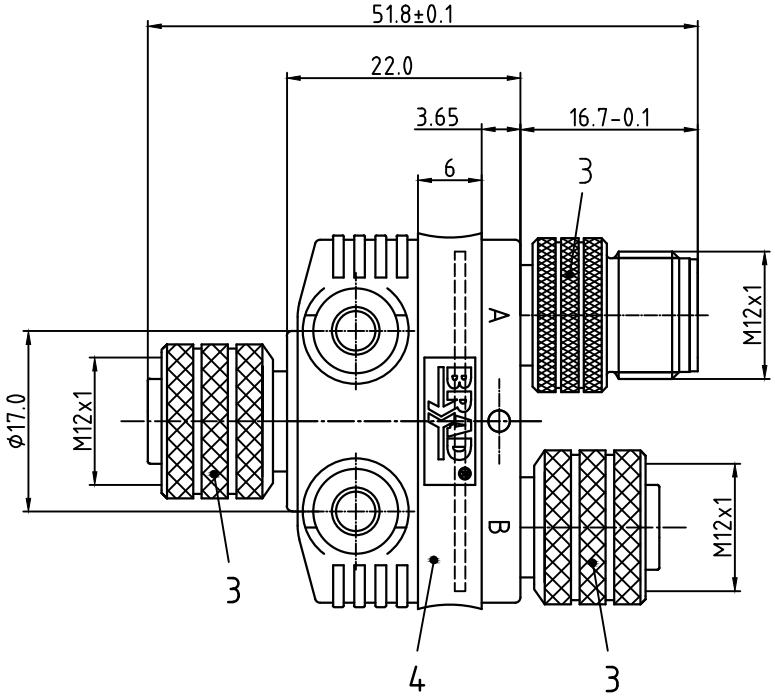

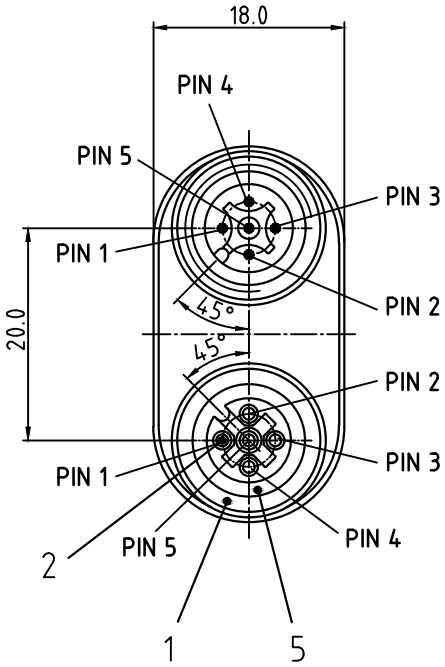

CONNECTOR SPECIFICATION: Steckverbinder-Eigenschaften:	
VOLTAGE RATING Bemessungsspannung	60V AC/DC
AMPERAGE RATING Betriebsstrom	max. 4 AMPS
PROTECTION Schutzart	IP67
OPERATING TEMPERATURE Temperaturbereich	-25°C TO +90°C

WIRING DIAGRAM
Verdrahtungsplan

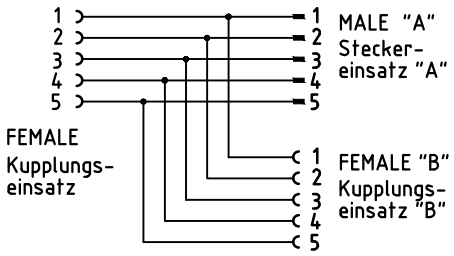

POS. Pos.	COMPONENT Einzelteil	MATERIAL Material	FINISH Oberfläche
1	INSERT Kontaktträger	PUR / BLACK PUR / schwarz	- - -
2	CONTACT SOCKET Kontakt	COPPER ALLOY Kupferlegierung	GOLD-PLATED vergoldet
3	COUPLING NUT Schraubhülse	BRASS Messing	NICKEL-PLATED vernickelt
4	OVERMOULD Umspritzung	PUR / BLACK PUR /schwarz	- - -
5	O-RING (FEMALE) O-Ring (Buchse)	FPM / RED FPM / rot	- - -

ENG.-NO.: 0812-05EFJ-0000A

DESCRIPTION
EC NO: IPG2012-0246
DRWN: BBRAUCH 2011/11/11
CHKD: REISSNER ----
APPR: REISSNER 2012/03/22
DESCRIPTION
REV 1

QUALITY SYMBOLS
▼ = 0
Ⓒ = 0

GENERAL TOLERANCES (UNLESS SPECIFIED)

	mm	INCH
4 PLACES	±---	±---
3 PLACES	±---	±---
2 PLACES	±---	±---
1 PLACE	±0.3	±---
ANGULAR ±	1 °	

DRAFT WHERE APPLICABLE MUST REMAIN WITHIN DIMENSIONS

DIMENSION STYLE	SCALE	DESIGN UNITS	
MM	2:1	METRIC	THIRD ANGLE PROJECTION

DRAWN BY	DATE
BBRAUCH	2012/03/12
CHECKED BY	DATE
REISSNER	2012/03/13
APPROVED BY	DATE
REISSNER	2012/03/22

SPL YS M12 5P AC FE
MA FE
---

molex MOLEX INCORPORATED

MATERIAL NO. 1200685107
DOCUMENT NO. SD-120068-111
SHEET NO. 1 OF 1
SIZE A3

THIS DRAWING CONTAINS INFORMATION THAT IS PROPRIETARY TO MOLEX INCORPORATED AND SHOULD NOT BE USED WITHOUT WRITTEN PERMISSION