PART NUMBER	ENGINEERING NUMBER
1300680039	TC30200A45M010

CABLE LENGTH TOLERANCES
<.3M [1FT]: +19mm-0 [+.75in-0]
.3 - .9M [1 - 3FT]: +44.5mm-0 [+1.75in-0]
.9 - 1.8M [3 - 6FT]: +55.6mm-0 [+2.19in-0]
1.8 - 3.7M [6 - 12FT: +88.9mm-0 [+3.50in-0]
3.7 - 7.3M [12 - 24FT]: +165.1mm-0 [+6.50in-0]
7.3-14.6M [24 - 48FT]: +317.5mm-0 [+12.50in-0]
14.6 - 30.5M [48-100FT]: +622.3mm-0 [+24.50in-0]
OVER 30M [100FT] +2% OF FINISHED LENGTH

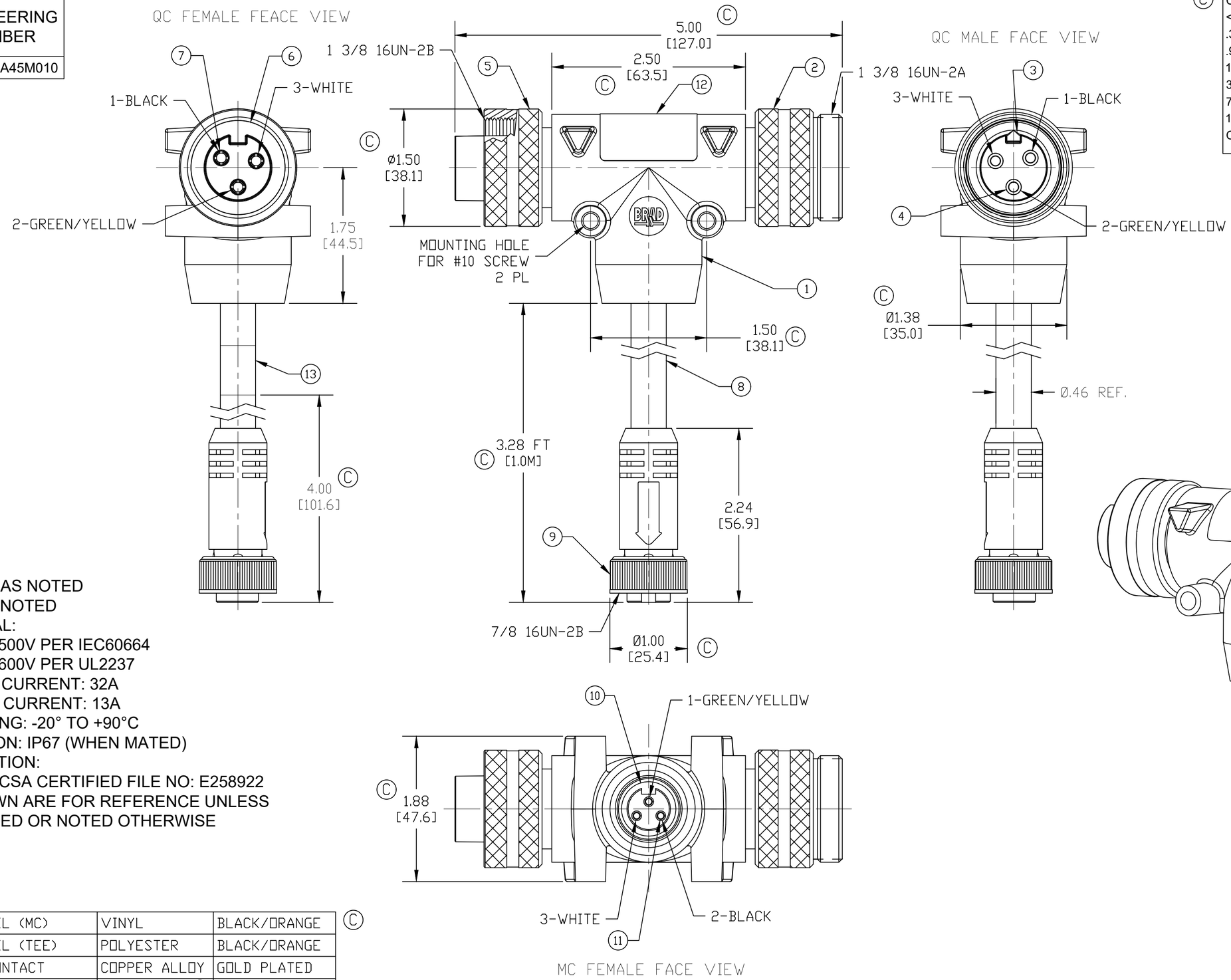

NOTES:
1. MATERIAL: AS NOTED
2. FINISH: AS NOTED
3. ELECTRICAL:
   VOLTAGE: 500V PER IEC60664
   600V PER UL2237
   MAX THRU CURRENT: 32A
   MAX DROP CURRENT: 13A
4. TEMP RATING: -20° TO +90°C
5. PROTECTION: IP67 (WHEN MATED)
6. CERTIFICATION:
   UL LISTED/CSA CERTIFIED FILE NO: E258922
7. (C) DIMS SHOWN ARE FOR REFERENCE UNLESS TOLERANCED OR NOTED OTHERWISE

ITEM	DESCRIPTION	MATERIAL	FINISH
13	WARNING LABEL (MC)	VINYL	BLACK/ORANGE
12	WARNING LABEL (TEE)	POLYESTER	BLACK/ORANGE
11	MC SOCKET CONTACT	COPPER ALLOY	GOLD PLATED
10	MC FEMALE INSERT	TPE (C)	BLACK
9	MC COUPLING NUT	ZINC ALLOY	BLACK E-COAT
8	CABLE, 16AWG-3 TYPE TC-ER, STOOW	PVC	GRAY
7	QC SOCKET CONTACT	COPPER ALLOY	GOLD PLATED
6	QC FEMALE INSERT	TPE (C)	BLACK
5	QC FEMALE COUPLING NUT	ALUMINUM	CLEAR ANODIZE
4	QC PIN CONTACT	COPPER ALLOY	GOLD PLATED
3	QC MALE INSERT	TPE (C)	BLACK
2	QC MALE COUPLING NUT	ALUMINUM	CLEAR ANODIZE
1	OVERMOLD	TPE (C)	GRAY

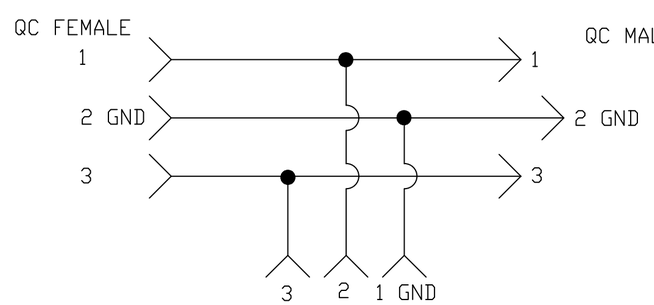

WIRE DIAGRAM

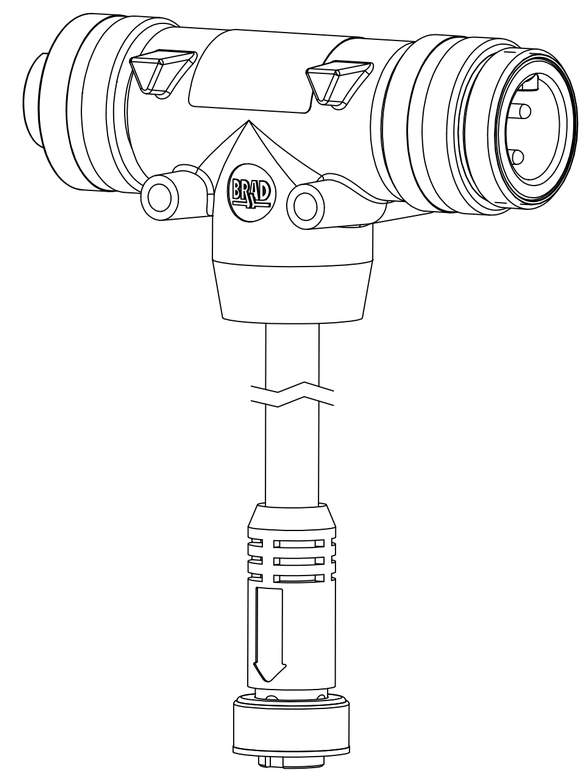

DOCUMENT STATUS	P1	RELEASE DATE	2022/02/02 23:12:56

THIS DRAWING CONTAINS INFORMATION THAT IS PROPRIETARY TO MOLEX ELECTRONIC TECHNOLOGIES, LLC AND SHOULD NOT BE USED WITHOUT WRITTEN PERMISSION

FUNCTIONAL SYMBOLS: FA=0, FC=0, FP=0
DIVISIONAL SYMBOLS

DIMENSION UNITS: INCH/MM
SCALE: NTS

GENERAL TOLERANCES (UNLESS SPECIFIED)

	mm	INCH
4 PLACES	±----	±----
3 PLACES	±----	±----
2 PLACES	±----	±----
1 PLACE	±----	±----
0 PLACES	±----	±----
ANGULAR TOL ±	---- °	

DRAFT WHERE APPLICABLE MUST REMAIN WITHIN DIMENSIONS

CURRENT REV DESC: INSERT AND O-MOLD CHANGED TO TPE, ADD NOTE 7, DIMS CHANGED T0 IN/MM, ADD LENGTH TOLS

EC NO: 690918
DRWN: RSTONE 2022/01/05
CHK'D: MZIELINSKI 2022/01/27
APPR: BWOODMAN 2022/02/02

INITIAL REVISION:
DRWN: KJOZWIK 2010/01/15
APPR: JFMURPHY 2010/01/20

THIRD ANGLE PROJECTION | DRAWING: C-SIZE | SERIES: 130068

molex

BRAD POWER M35 3 POLE TEE
WITH MINI-CHANGE 3 POLE 16AWG CABLE DROP

PRODUCT CUSTOMER DRAWING

DOCUMENT NUMBER	DOC TYPE	DOC PART	REVISION
SD-130068-013	PSD	001	C

MATERIAL NUMBER	CUSTOMER	SHEET NUMBER
SEE P/N CHART	GENERAL MARKET	1 OF 1

FORMAT: IN-ACAD-tb-prod-C
REVISION: B
DATE: 2020/01/14