	COUNT	DESCRIPTION OF REVISIONS	BY	CHKD	DATE		COUNT	DESCRIPTION OF REVISIONS	BY	CHKD	DATE
△						△					
△						△					

APPLICABLE STANDARD				
RATING	OPERATING TEMPERATURE RANGE	−40 °C TO +85°C	STORAGE TEMPERATURE RANGE	°C TO °C
	VOLTAGE	AC 125 V	OPERATING HUMIDITY RANGE	% TO %
	CURRENT	1 A	APPLICABLE CABLE	

SPECIFICATIONS

ITEM	TEST METHOD	REQUIREMENTS	QT	AT
CONSTRUCTION				
GENERAL EXAMINATION	VISUALLY AND BY MEASURING INSTRUMENT.	ACCORDING TO DRAWING.	○	○
MARKING	CONFIRMED VISUALLY.		○	○
ELECTRIC CHARACTERISTICS				
CONTACT RESISTANCE	100 mA (DC OR 1000 Hz).	40 mΩ MAX.	○	○
INSULATION RESISTANCE	250 V DC.	1000 MΩ MIN.	○	—
VOLTAGE PROOF	350 V AC FOR 1 min.	NO FLASHOVER OR BREAKDOWN.	○	○
MECHANICAL CHARACTERISTICS				
INSERTION AND WITHDRAWAL FORCES	MEASURED BY APPLICABLE CONNECTOR.	INSERTION FORCE 29.4 N MAX. EXTRACTION FORCE 29.4 N MAX.	○	—
MECHANICAL OPERATION	20000 TIMES INSERTIONS AND EXTRACTIONS.	① CONTACT RESISTANCE: 60 mΩ MAX. ② NO DAMAGE, CRACK AND LOOSENESS, OF PARTS.	○	—
VIBRATION	FREQUENCY 10 TO 55 Hz, SINGLE AMPLITUDE 1.5 mm, — m/s² AT 2 h, FOR 3 DIRECTIONS.	① NO ELECTRICAL DISCONTINUITY OF 10 μs. ② CONTACT RESISTANCE: 60 mΩ MAX. ③ NO DAMAGE, CRACK AND LOOSENESS, OF PARTS.	○	—
SHOCK	490 m/s² DIRECTIONS OF PULSE 11 ms AT 3 TIME FOR 3 DIRECTION.		○	—
ENVIRONMENTAL CHARACTERISTICS				
RESISTANCE TO DRY HEAT	EXPOSED IN 85 °C,500h.	① CONTACT RESISTANCE: 60 mΩ MAX. ② INSULATION RESISTANCE: 1000 MΩ MIN. ③ NO DAMAGE, CRACK AND LOOSENESS, OF PARTS.	○	—
RAPID CHANGE OF TEMPERATURE	TEMPERATURE -55→15~35 → 85 → 15~35 °C TIME 30 → 10~15 → 30 → 10~15 min UNDER 5 CYCLES.	① CONTACT RESISTANCE: 60 mΩ MAX. ② INSULATION RESISTANCE: 1000 MΩ MIN. ③ NO DAMAGE, CRACK AND LOOSENESS, OF PARTS.	○	—
DAMP HEAT (STEADY STATE)	EXPOSED AT 40 °C, 90~95 %, 96 h.	① CONTACT RESISTANCE: 60 mΩ MAX. ② INSULATION RESISTANCE: 1000 MΩ MIN. (AFTER DRY) ③ NO DAMAGE, CRACK AND LOOSENESS, OF PARTS.	○	—
CORROSION SALT MIST	EXPOSED IN 5 % SALT WATER SPRAY FOR 48 h.	① CONTACT RESISTANCE: 60 mΩ MAX. ② NO DAMAGE, CRACK AND LOOSENESS, OF PARTS.	○	—
HYDROGEN SULPHIDE	EXPOSED IN SO_2 10ppm,H_2S 3ppm,70~80%, 96 h.		○	—

REMARKS	DRAWN	DESIGNED	CHECKED	APPROVED	RELEASED
FOR REFERENCE ONLY Subject to change without notice Unless otherwise specified, refer to JIS C 5402.	J. Miura 98.12.7	A. Fumatsu 98.12.07	98.12.7	98.12.10	HRS 7 21 '04 USA

Note QT:Qualification Test AT:Assurance Test ○:Applicable Test

HRS HIROSE ELECTRIC CO., LTD.	SPECIFICATION SHEET	PART NO. 3560−16P−PG
CODE NO.(OLD) CL	DRAWING NO. SLC4−120892	CODE NO. CL235−0016−0

1/1

TO Q1

FORM No.231-1

FOR REFERENCE ONLY
Subject to change without notice

COUNT	DESCRIPTION OF REVISIONS	BY	CHKD	DATE	COUNT	DESCRIPTION OF REVISIONS	BY	CHKD	DATE

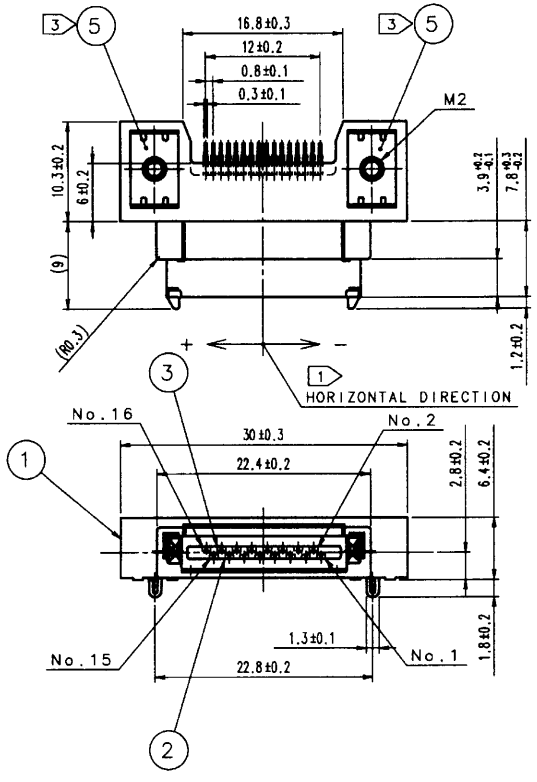

FIG.1
RECOMMENDED PCB PATTERN

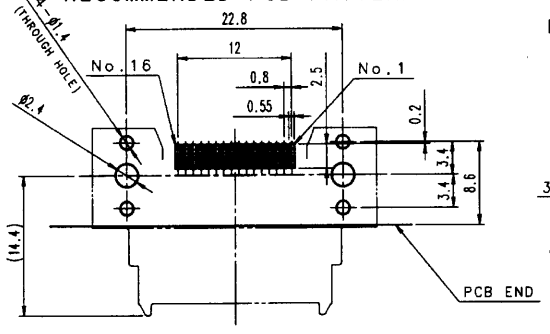

FIG.2:BEFORE AND AFTER MATING

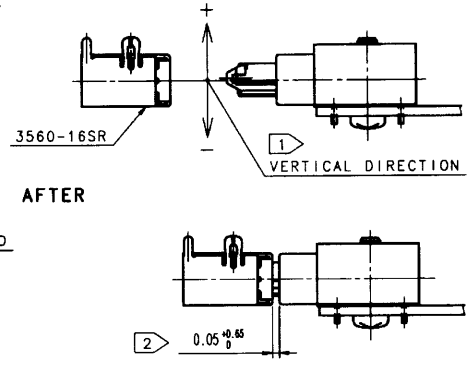

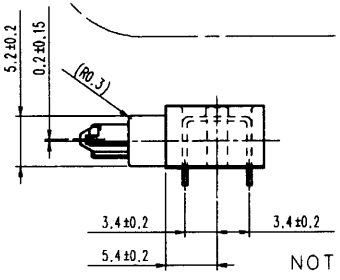

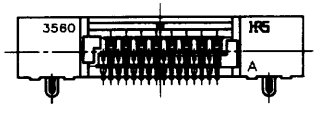

NOTE 1 FLOATING DISTANCE IN HORIZONTAL AND VERTICAL DIRECTIONS IS ±0.7. (APPLICABLE CONNECTOR:3560-16S OR 3560-16SR)
2 GAP BETWEEN MATED PLUG AND RECEPTACLE TO BE $0.05^{+0.65}_{0}$.
3 REFERENCE NO.④ AND NO.⑤ ARE CONNECTED INSIDE THE CONNECTOR. (GROUND IS TO BE CONNECTED TO PCB BY REFERENCE NO.⑤.)
4 SMT DIMENSION OF CONTACTS (REFERENCE NO.② AND NO.③) SHOWN IN FIG.3.

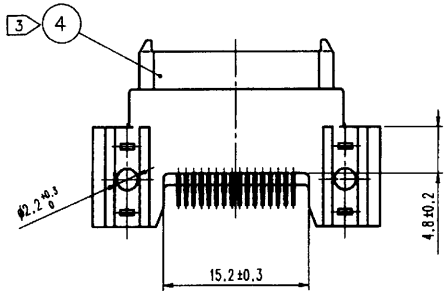

FIG.3
SMT CONTACT DIMENSION

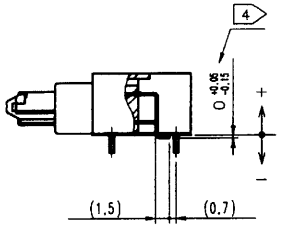

NO.	MATERIAL	FINISH, REMARKS	NO.	MATERIAL	FINISH, REMARKS
3	COPPER ALLOY	SELECTIVE GOLD PLATING + SELECTIVE TIN-LEAD PLATING			
2	COPPER ALLOY	SELECTIVE GOLD PLATING + SELECTIVE TIN-LEAD PLATING	5	COPPER ALLOY	TIN-LEAD PLATING
1	POLYAMIDE	BLACK UL94V-0	4	STAINLESS STEEL	

CODE NO. (OLD)	DRAWN	DESIGNED	CHECKED	APPROVED	RELEASED
	J.Miura 98.12.7	A.Funatsu 98.12.07	98.12.7	98.12.10	HRS 7.21.01 USA

SCALE 2 : 1	DRAWING NO. EDC3-120892	PART NO. 3560-16P-PG
UNITS mm	HRS HIROSE ELECTRIC CO.,LTD.	CODE NO. CL235-0016-0 1/2

TO
Q1

FORM NO.229

FIG-4. TRAY DIMENSION

COUNT	DESCRIPTION OF REVISIONS	BY	CHKD	DATE	COUNT	DESCRIPTION OF REVISIONS	BY	CHKD	DATE

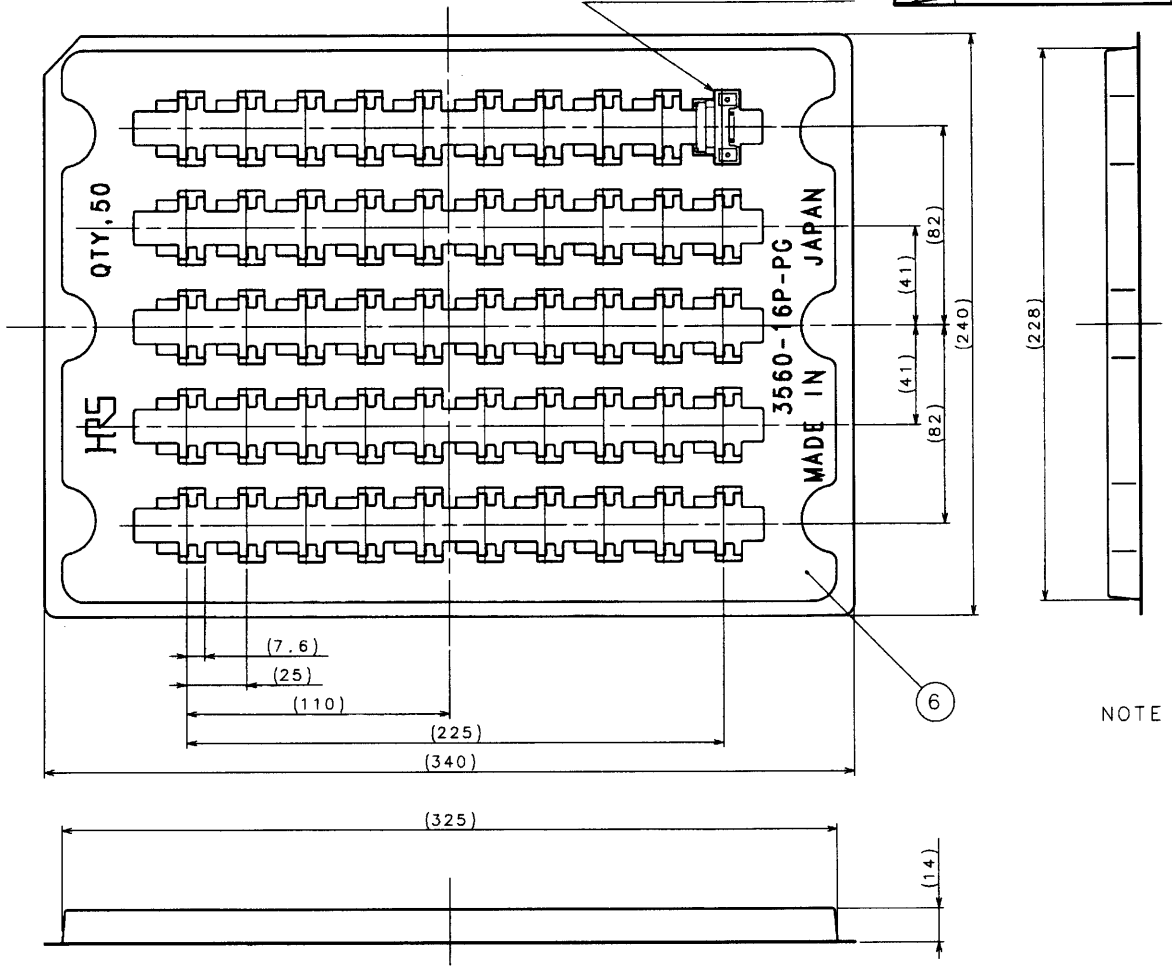

NOTE 5 CONNECTOR ORIENTATION IN TRAY CAVITIES SHOWN IN FIG-4.

6 CONNECTORS TO BE PACKAGED PER TRAY = 50 PCS.
NOTE: PLEASE ORDER THE CONNECTOR QUANTITY.

FOR REFERENCE ONLY
Subject to change without notice

TO
?

NO.	MATERIAL	FINISH, REMARKS	NO.	MATERIAL	FINISH, REMARKS
6	PVC				

CODE NO. (OLD)	DRAWN	DESIGNED	CHECKED	APPROVED	RELEASED
PACKAGING SPECIFICATION	J. Miura 98.12.7	A. Furatsu 98.12.07	98.12.7	98.12.10	HRS 7 21 '04 USA

SCALE 2 : 1	DRAWING NO. EDC3-120892	PART NO. 3560-16P-PG
UNITS mm	HRS HIROSE ELECTRIC CO., LTD.	CODE NO. CL235-0016-0 2/2

FORM NO. 229