© – TE Connectivity. All Rights Reserved.

REVISIONS					
P	LTR	DESCRIPTION	DATE	DWN	APVD
	D	ECR-21-116716	19JUN2022	TL	HL

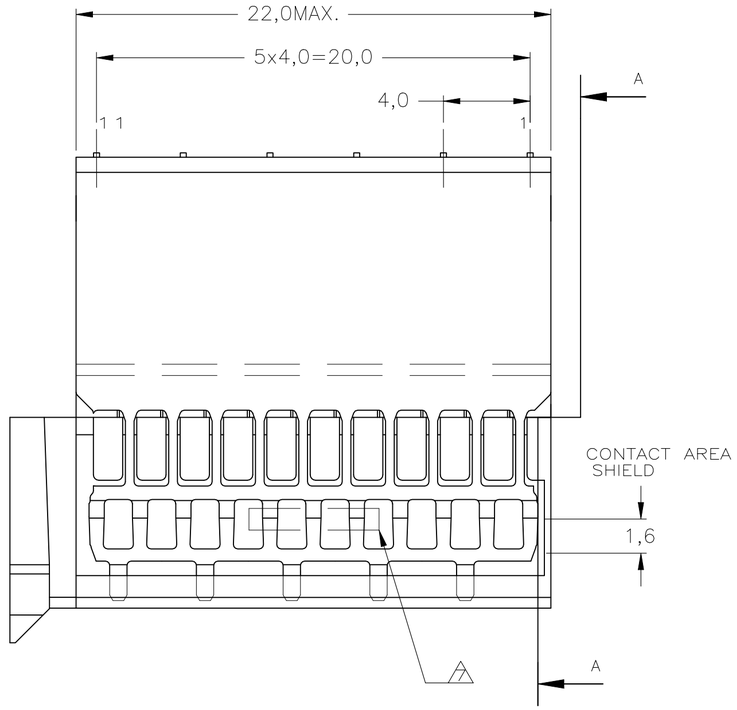

SECTION A–A

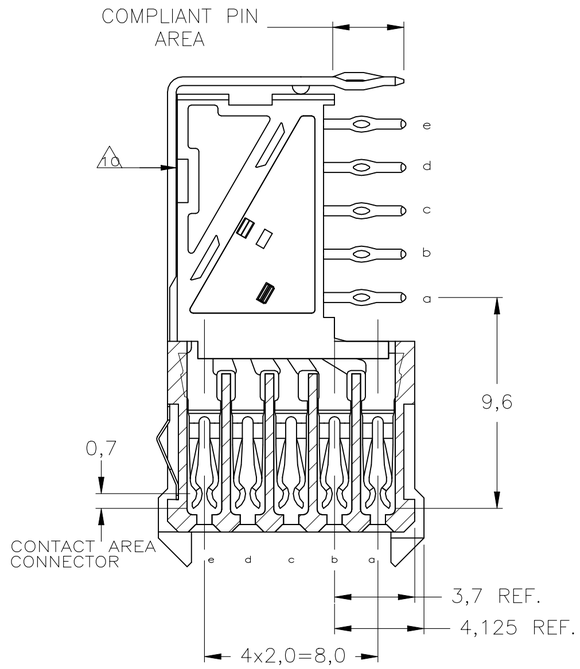

NOTES:

1. MATERIAL CONTACTS; PHOSPHORBRONZE
   MATERIAL SHIELD ; PHOSPHORBRONZE
   MATERIAL HOUSING; GLASSFILLED POLYESTER (GRAY)
2. GENERAL PLATING SPECIFICATION: UNDERPLATING (ENTIRE CONTACT):
   1,27µm NICKEL MIN. AND COMPLIANT PIN SECTION: 0,5µm TIN MIN.
   FOR PLATING OF MATING SURFACES SEE APPLICABLE
   SPECIFICATION REFERENCE FOR EACH DASH NUMBER.
3. CONFORMS TO ALL TESTING ACCORDING IEC 61076-4-101 PERFORMANCE LEVEL 2.
4. CONFORMS TO ALL TESTING ACCORDING IEC 61076-4-101 PERFORMANCE LEVEL 1.
5. CONNECTOR TESTED AND QUALIFIED AGAINST TELCORDIA GR-1217-CORE
   QUALITY LEVEL III, CENTRAL OFFICE APPLICATIONS.
6. CONNECTOR LUBRICATED WITH TELCORDIA GR-1217-CORE APPROVED LUBRICANT.
7. ASSEMBLY PRINTED WITH P/N AND DATECODE
   THE MARKING CAN APPEAR ON THE FRONT SIDE OR BACK SIDE.
8. HOLE PATTERN FOR FEMALE CONNECTOR TYPE C
   55 PLATED-THROUGH HOLES AT 2x2mm SQUARE GRID
9. ROW "f" 6 PLATED THROUGH HOLES FOR UPPERSHIELD
10. SHIELD MOUNTED ON CONNECTOR WITH DOUBLE SIDED
    ADHESIVE TAPE OR ADHESIVE.
11. FITS WITH LOWERSHIELD, BASIC PARTNUMBER : 5352112.

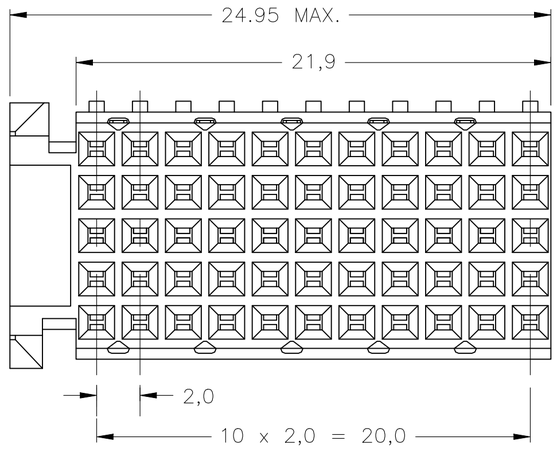

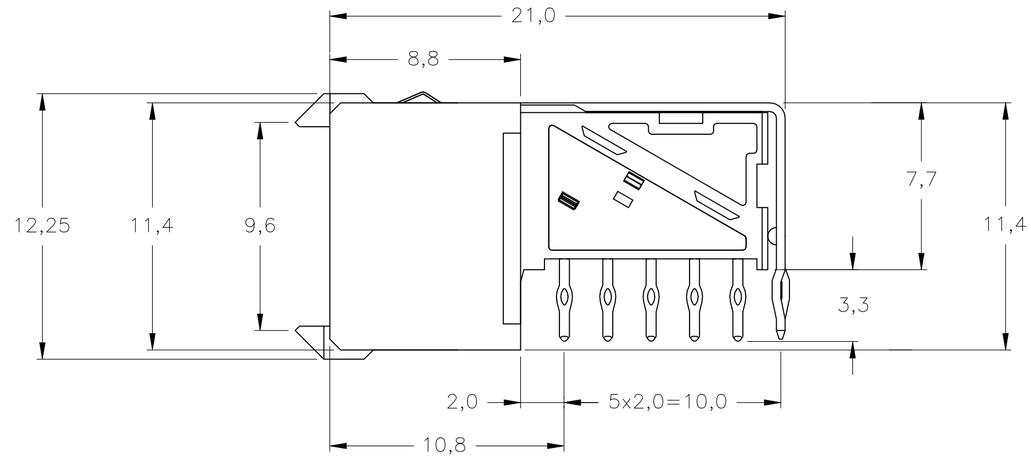

COMPONENT SIDE AS SHOWN
RECOMMENDED PCB-HOLE LAY-OUT

SCALE 2,5:1

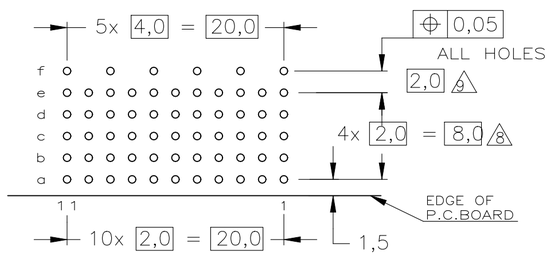

P.C.B. HOLE DIM. COMPLIANT PIN
FOR DETAILS SEE
APPLICATION SPECIFICATION

FINISH	MATERIAL	PARTNUMBER
2 5 6	1	1857996-9
2 4	1	1857996-4
2 3	1	1857996-1

THIS DRAWING IS A CONTROLLED DOCUMENT.

DIMENSIONS: mm

TOLERANCES UNLESS OTHERWISE SPECIFIED:
0 PLC ± –
1 PLC ± –
2 PLC ± – ±0.2
3 PLC ± –
4 PLC ± –
ANGLES ± –

MATERIAL –
FINISH –

DWN	J.van Hoek	23AUG2007
CHK	B.Mooij	23AUG2007
APVD	J.Broeksteeg	23AUG2007
PRODUCT SPEC	108-19082	
APPLICATION SPEC	114-19029	
WEIGHT	0.000000	

TE Connectivity Ltd.

NAME: Z-PACK 2mm HM
TYPE C – 11 COLUMNS
PRE-SHIELDED RECEPTACLE

SIZE	CAGE CODE	DRAWING NO	RESTRICTED TO
A2	00779	C-1857996	—

CUSTOMER DRAWING | SCALE 5:1 | SHEET 1 OF 1 | REV D

1857996