THIS DRAWING IS UNPUBLISHED. RELEASED FOR PUBLICATION -,- .
© COPYRIGHT - By - ALL RIGHTS RESERVED.

LOC	DIST
GP	00

REVISIONS

P	LTR	DESCRIPTION	DATE	DWN	APVD
	B1	REVISED PER ECO-11-004835	11MAR11	RK	HMR

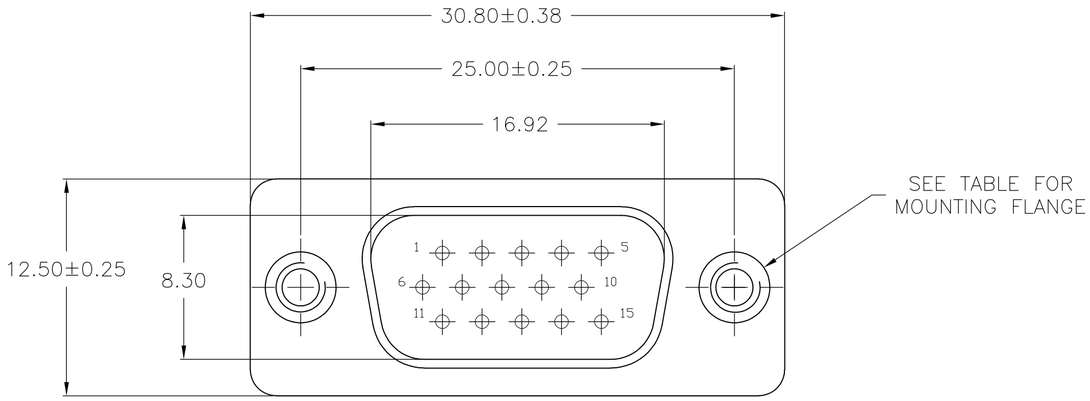

MATERIAL:

1. HOUSING: PBT 30% G.F. POLYESTER, BLACK, UL-94V-0 RATED.
2. CONTACT: BRASS, GOLD IN MATING AREA (SEE TABLE), 120μ" MIN TIN PLATE ON SOLDER-TAIL, BOTH OVER 50μ" MIN NICKEL UNDERPLATE.
3. SHELL: STEEL, NICKEL PLATE.

4 FOUR DIGIT DATE CODE IN THIS FORMAT.

01 45
YEAR — MANAFACTURING WEEK

5 DATUMS -X- & -Y- TO BE ESTABLISHED BY CUSTOMER.

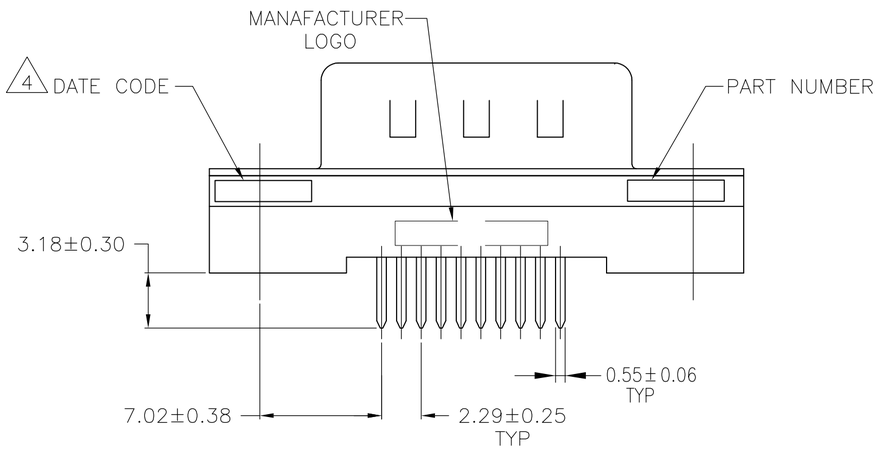

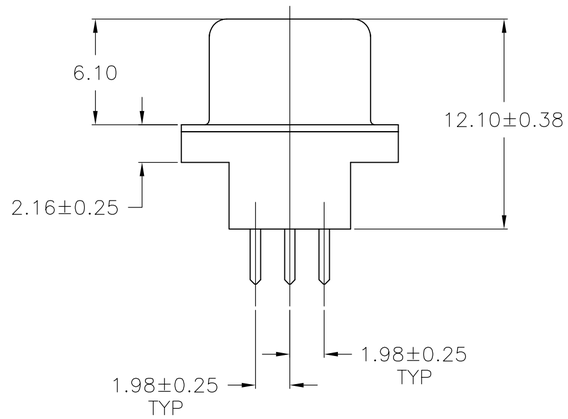

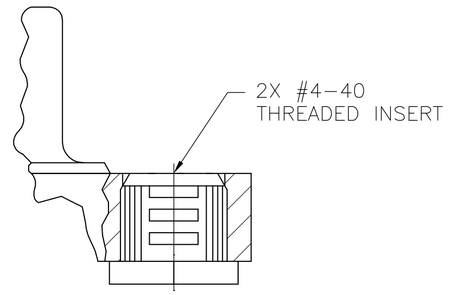

DETAIL A

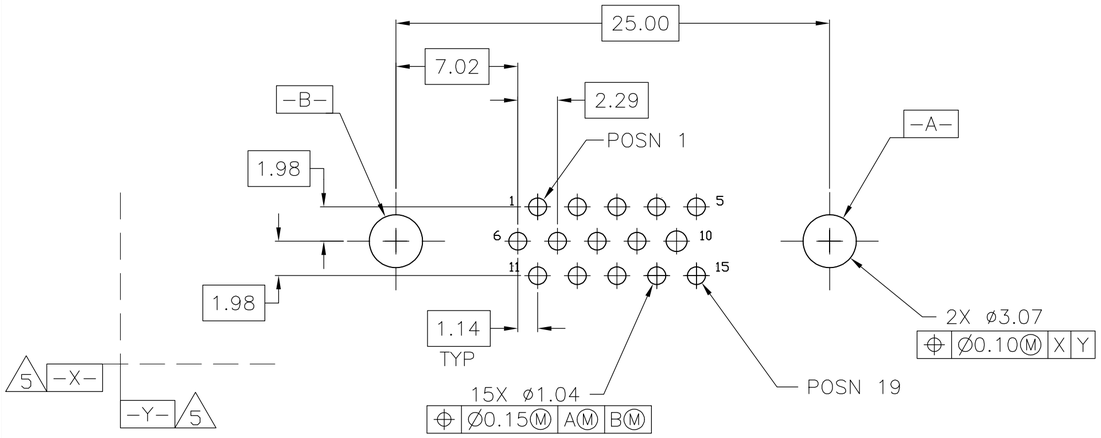

RECOMMENDED PCB LAYOUT

OBSOLETE	TRAY	GOLD FLASH	DETAIL A	5749798-4
OBSOLETE	TRAY	15μ" MIN GOLD	DETAIL A	5749798-3
	TRAY	30μ" MIN GOLD	DETAIL A	5749798-1
	PACKAGING	CONTACT MATING AREA FINISH	MOUNTING FLANGE CONFIGURATION	PART NUMBER

THIS DRAWING IS A CONTROLLED DOCUMENT.

DIMENSIONS: mm

TOLERANCES UNLESS OTHERWISE SPECIFIED:
0 PLC ± -
1 PLC ± 0.30
2 PLC ± 0.20
3 PLC ± 0.10
4 PLC ± -
ANGLES ± 2°

MATERIAL -
FINISH -

DWN B. MCMASTER 14JUN05
CHK S. BOLASH 14JUN05
APVD S. BOLASH 14JUN05
PRODUCT SPEC 108-1092
APPLICATION SPEC 114-13199
WEIGHT -

TE Connectivity

NAME AMPLIMITE HD-22, VERTICAL 15 POS. PLUG

SIZE	CAGE CODE	DRAWING NO	RESTRICTED TO
A2	00779	C-5749798	-

CUSTOMER DRAWING | SCALE 4:1 | SHEET 1 OF 1 | REV B1

5749798