ISL Products International

ø77mm Worm Gear Motor
Left Side Gearbox

MOT-I-81589

Online ID#: ***WGM-77-24-55-L***

Our Worm Gear Motors are an excellent automation solution providing right angle output with self-braking technology. They are equiped to handle varying loads and are best for intermittent duty operation. With endless performance combinations, we have the gear motor for your next application.

Contact Us for alternative solutions!

Specifications

Gearhead Type:	Worm - Left side	**No-Load Speed:**	55 rpm *(+/- 10%)*
Motor Type:	Carbon - Brushed	**No-Load Current:**	< 0.9 A
Rated Voltage:	24V DC	**Stall Torque** *(projected)* **:**	1,015 kg.cm
Rated Speed:	50 rpm	**Max. Power:**	140 W
Rated Torque:	107 kg.cm	**Termination Style:**	Lead Wires (16AWG)

** Gearbox limitations are set at 500 kg.cm, operating past this torque limit may create premature failure.*

Dimensions

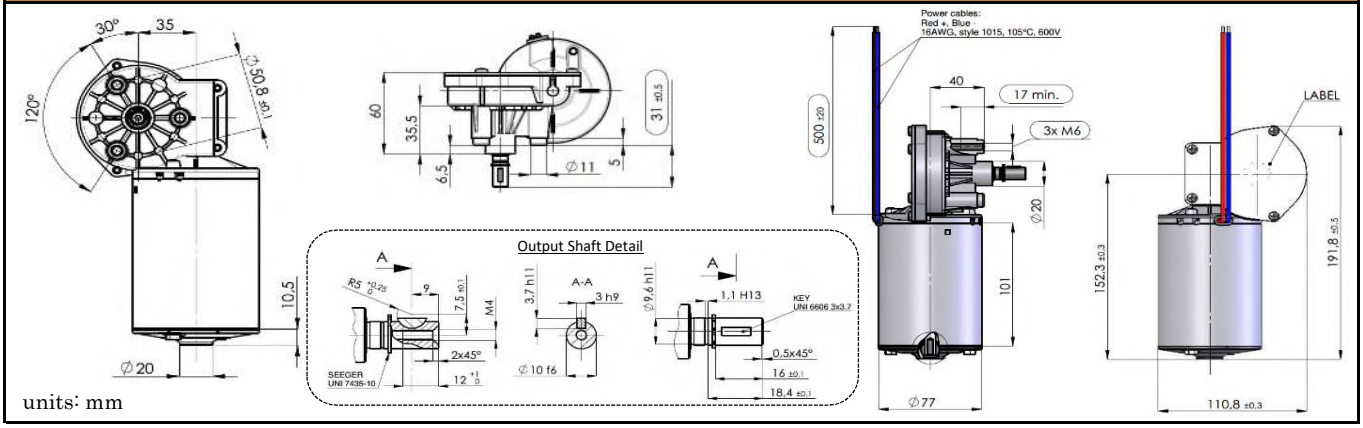

Performance Curve

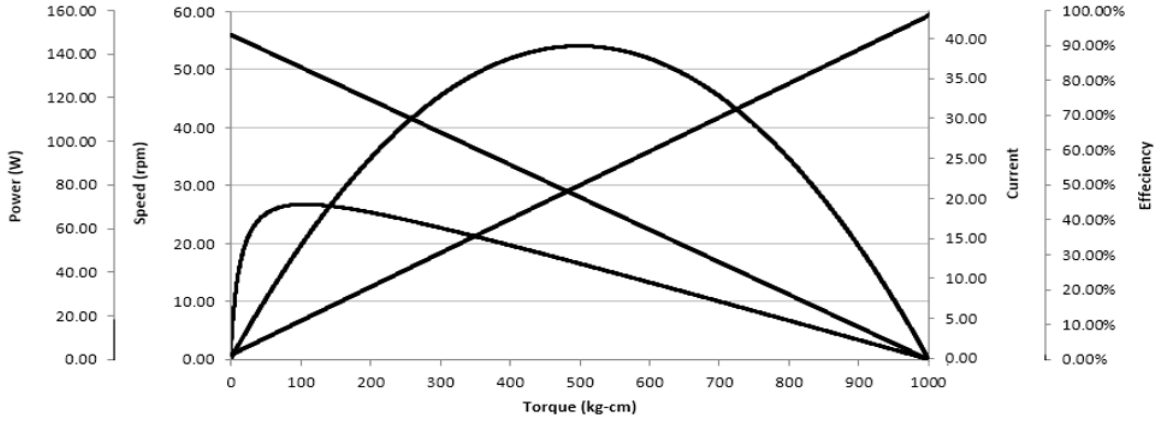

© 2023 ISL Products International Ltd. Specifications subject to change without notice.