© – TE Connectivity. All Rights Reserved.

REVISIONS					
P	LTR	DESCRIPTION	DATE	DWN	APVD
	B1	REV PER ECO-20-004668	08JUN2020	ML	SZ

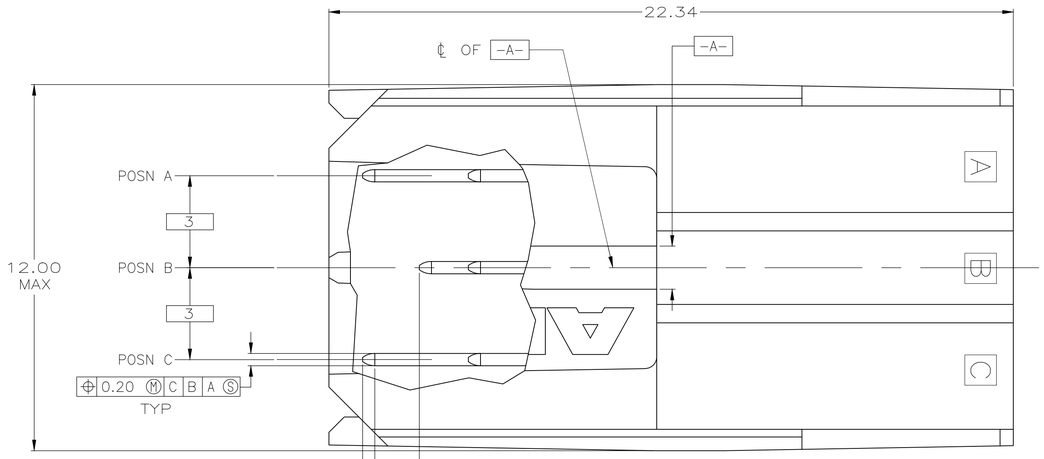

1. MATERIAL: HOUSING: POLYESTER. COLOR: GRAY. UL 94V-O.
   CONTACT: COPPER ALLOY.
2. FINISH: IN ACCORDANCE WITH PRODUCT SPECIFICATION 108-1651, GOLD PLATING OR EQUIVALENT PLATING ON PRODUCT CONTACT MATING AREA, AND MATTE TIN PLATING ON COMPLIANT PIN AREA, ALL OVER MATTE NICKEL UNDERPLATED. DETAIL PLEASE REFER TO PRODUCT SPECIFICATION 108-1651.
3. FINISH: CONTACT LUBRICATION WITH BELLCORE APPROVED LUBRICANT. TECHNICAL REFERENCE: TR-NWT-001217 ISSUE 1, SEPTEMBER 1992.
4. REFERENCE APPLICATION SPEC 114-1103 FOR RECOMMENDED PLATED THRU HOLE DIAMETER AND PLATING THICKNESS.
5. CURRENT RATING 10A/CONTACT PER PRODUCT SPEC 108-1651.

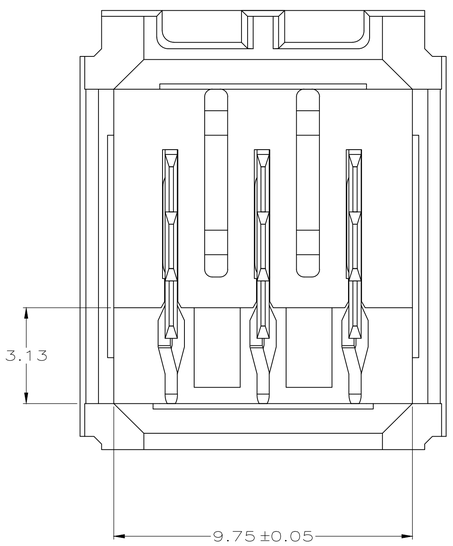

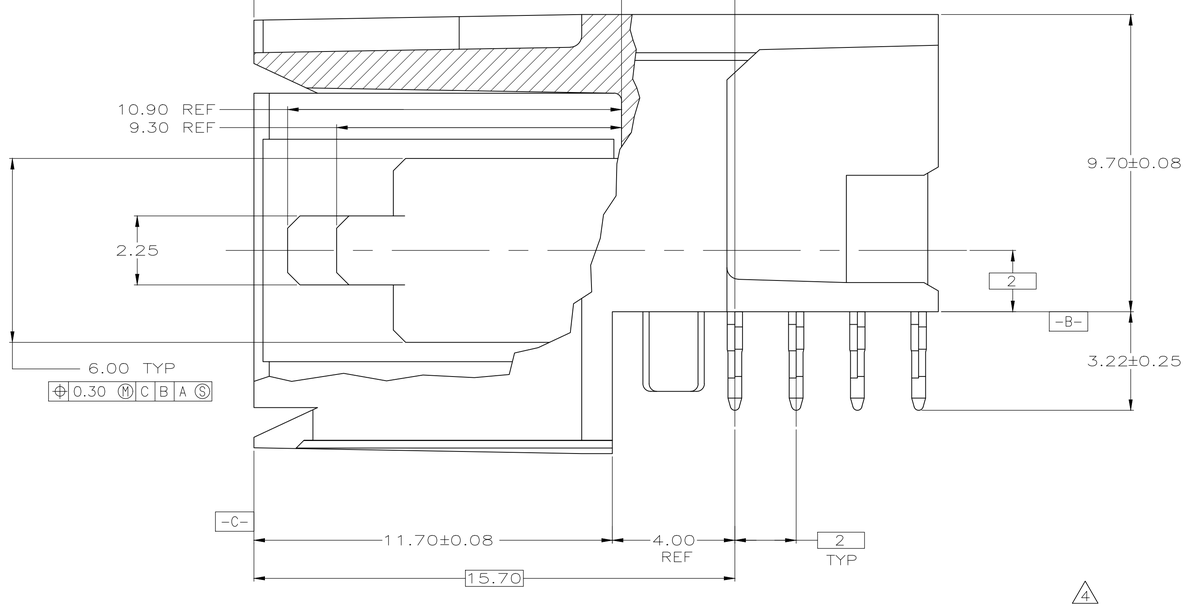

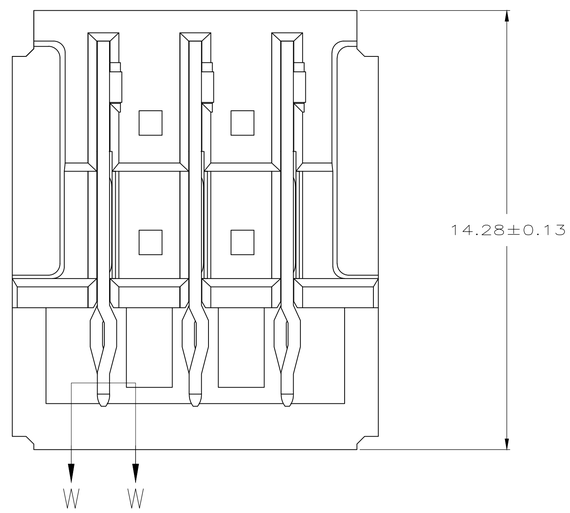

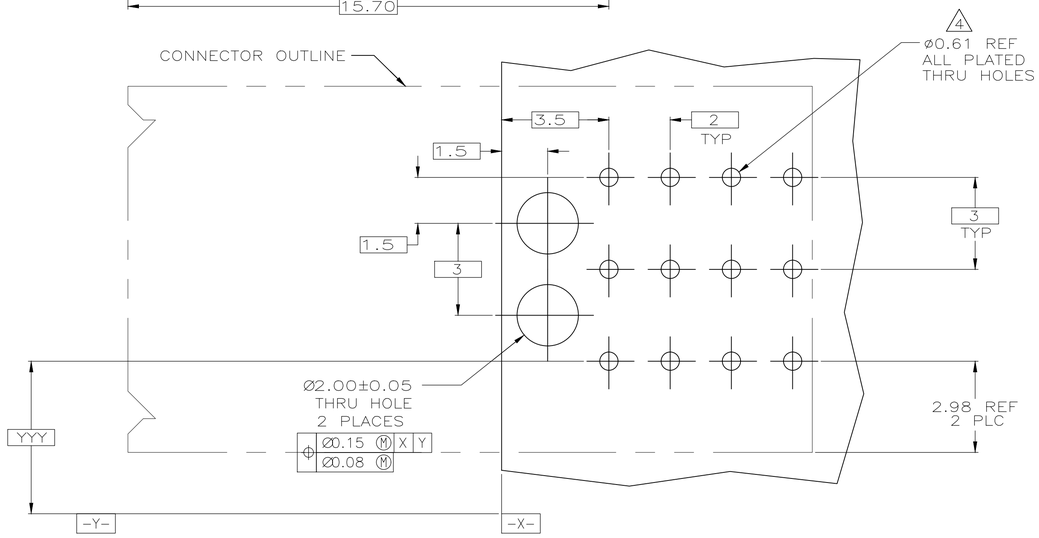

RECOMMENDED PCB HOLE LAYOUT

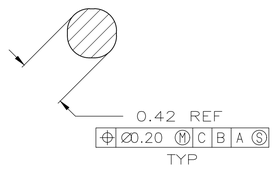

SECTION W-W
SCALE 40:1

5223962-1

PART NUMBER

THIS DRAWING IS A CONTROLLED DOCUMENT.

DIMENSIONS: mm

TOLERANCES UNLESS OTHERWISE SPECIFIED:
0 PLC ± –
1 PLC ± –
2 PLC ± 0.13
3 PLC ± –
4 PLC ± –
ANGLES ± –

MATERIAL 1

FINISH 2 3

DWN	R.CARBO	10DEC04
CHK	R.PATTERSON	10DEC04
APVD	R.PATTERSON	10DEC04

PRODUCT SPEC 108-1651

APPLICATION SPEC 114-1103

WEIGHT 0.000000

TE Connectivity

NAME: RIGHT ANGLE HEADER ASSY W/ RETENTION PEGS SEQUENCED UNIVERSAL POWER MODULE

SIZE	CAGE CODE	DRAWING NO	RESTRICTED TO
A1	00779	C-5223962	–

CUSTOMER DRAWING | SCALE 10:1 | SHEET 1 OF 1 | REV B1

4805 (1/15)