ORDER NO.	WOODHEAD NO.	COLOR
130146-0213	25W04MB-P	YELLOW

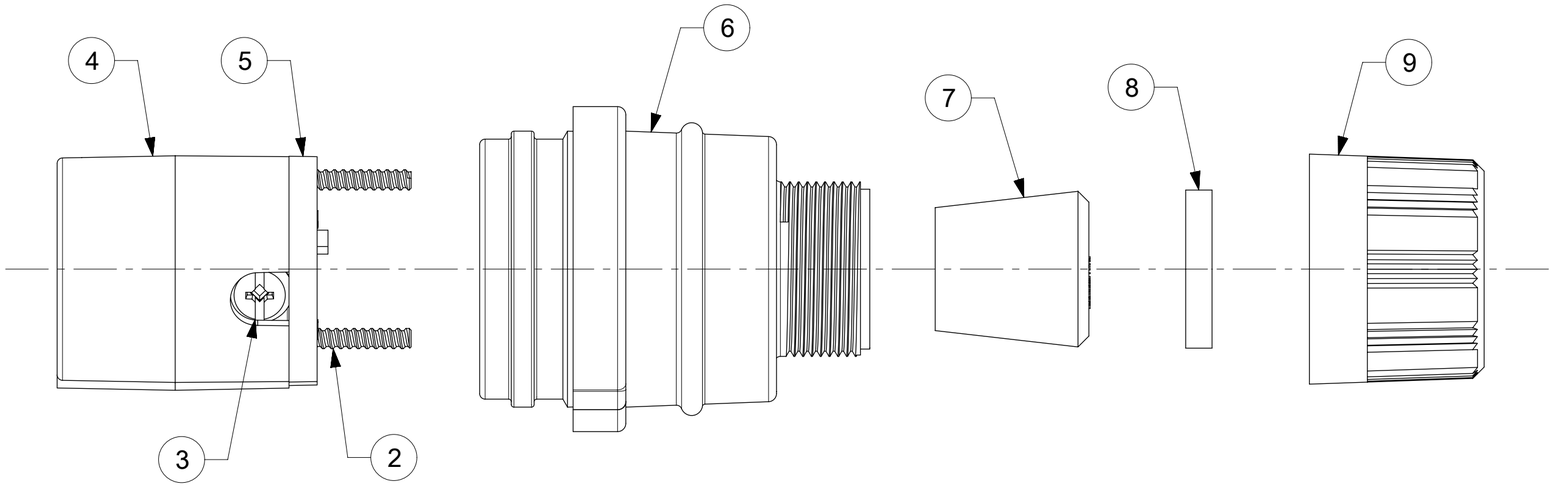

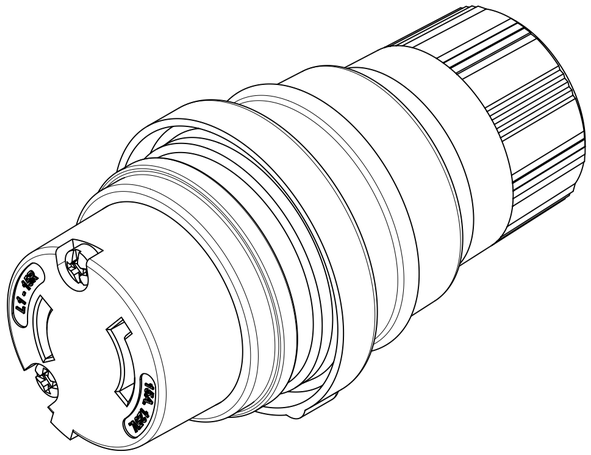

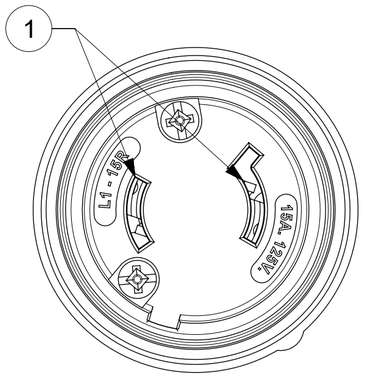

FACE VIEW

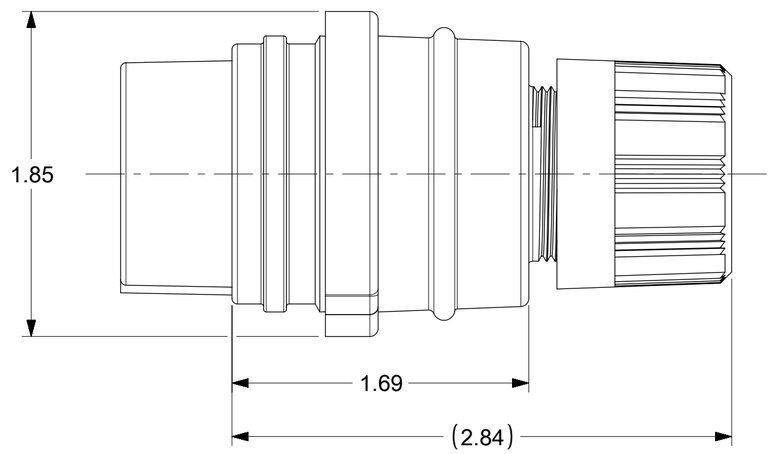

NOTES:
1. SEE INSTRUCTION SHEET NUMBER 1301414770 FOR PRODUCT SPECIFICATION.
2. CABLE RANGE FROM 0.375" TO 0.625"

ITEM NO.	DESCRIPTIONS	MATERIAL	QTY.
1	BLADES	BRASS	2
2	RETAINING SCREWS	STAINLESS STEEL	2
3	TERMINAL SCREWS	BRASS, ZINC PLATED	2
4	INSERT	NYLON	1
5	TERMINAL COVER	POLYCARBONATE	1
6	HOUSING	RUBBER WITH NYLON THREAD	1
7	GROMMETS	RUBBER	4
8	FRICTION RING	NYLON	1
9	COMPRESSION NUT	NYLON	1

DOCUMENT STATUS	P1	RELEASE DATE	2019/04/04 21:14:39

THIS DRAWING CONTAINS INFORMATION THAT IS PROPRIETARY TO MOLEX ELECTRONIC TECHNOLOGIES, LLC AND SHOULD NOT BE USED WITHOUT WRITTEN PERMISSION

SYMBOLS: EA = 0; EC = 0; EP = 0; S = 0; ▼ = 0; C = 0; ☒ = 0; ■ = 0; V = 0

DIMENSION UNITS	SCALE
INCH	NTS

GENERAL TOLERANCES (UNLESS SPECIFIED)

ANGULAR TOL	±	0.5 °
4 PLACES	±	
3 PLACES	±	0.005
2 PLACES	±	0.01
1 PLACE	±	0.02
0 PLACES	±	

DRAFT WHERE APPLICABLE MUST REMAIN WITHIN DIMENSIONS

CURRENT REV DESC:

EC NO: 614930
DRWN: VBASUTHKARP 2019/04/04
CHK'D: DNGUYEN62 2019/04/04
APPR: HKNEELAND 2019/04/04

INITIAL REVISION:
DRWN: ABABU01 2018/11/27
APPR: HKNEELAND 2019/03/21

THIRD ANGLE PROJECTION | DRAWING: C-SIZE | SERIES: 130146

molex

WATERTITE CONNECTOR, L1-15R

PRODUCT CUSTOMER DRAWING

DOCUMENT NUMBER	DOC TYPE	DOC PART	REVISION
1301460213	PSD	000	A1

MATERIAL NUMBER	CUSTOMER	SHEET NUMBER
SEE TABLE	GENERAL MARKET	1 OF 1

FORMAT: tb-prod-C
REVISION: H
DATE: 2018/01/18