VIEW ON MATING SIDE

	1	2	3	4	5	6	7	8	9	10	11	12	13	14	15	16	17	18	19	20	21	22	23	24	25	26	27	28	29	30	31	32
d	Z	Z	A	A	A	A	A	A	A	A	A	A	A	A	A	A	A	A	A	A	A	A	A	A	A	A	A	A	A	A	A	A
c	Z	Z	A	A	A	A	A	A	A	A	A	A	A	A	A	A	A	A	A	A	A	A	A	A	A	A	A	A	A	A	A	A
b	Z	Z	A	A	A	A	A	A	A	A	A	A	A	A	A	A	A	A	A	A	A	A	A	A	A	A	A	A	A	A	A	A
a	Z	Z	A	A	A	A	A	A	A	A	A	A	A	A	A	A	A	A	A	A	A	A	A	A	A	A	A	A	A	A	A	A

A = 120 STANDARD CONTACTS L=2
Z = 8 FMLB CONTACTS + 1.0 L=2
S = 128 TOTAL NUMBER OF CONTACTS

MARKING	STANDARD
PERFORMANCE LEVEL	G2/0 = CONTACT AREA PERFORM. LEVEL 2 / TERMINATION TIN
FLUX PROOF	NO
FIXING CLIP	NO
DIMENSIONS	SDA-85015-0001 SHT 3
TECHNICAL DATA	PS-85013-0002

CONTACT SYMBOL	PERFORM. LEVEL	CONTACT POSITION NUMBER
A	G2/0	a3-a32, b3-b32, c3-c32, d3-d32
Z	G2/0	a1-a2, b1-b2, c1-c2, d1-d2

ENTER DESCRIPTION
EC NO: I2008-0288
DRWN:SJ 2007/11/28
CH'KD:KPRASAD 2007/11/28
APPR:KPRASAD 2007/11/28
REV A
DESCRIPTION

QUALITY SYMBOLS
▼=0
▽C=0

GENERAL TOLERANCES (UNLESS SPECIFIED)

	mm	INCH
4 PLACES	± ---	± ---
3 PLACES	± ---	± ---
2 PLACES	± ---	± ---
1 PLACE	± ---	± ---
ANGULAR ±---°		

DRAFT WHERE APPLICABLE MUST REMAIN WITHIN DIMENSIONS

DIMENSION STYLE: MM ONLY
SCALE: 4:1
DESIGN UNITS: METRIC
THIRD ANGLE PROJECTION

DRAWN BY: SJ DATE: 2007/11/28
CHECKED BY: KPRASAD DATE: 2007/11/28
APPROVED BY: KPRASAD DATE: 2007/11/28

TITLE: 128 POS MALE CONNECTOR DIN 41612 STYLE R CONTACT ARRANGEMENT

molex MOLEX INCORPORATED

MATERIAL NO. 85015-9005
DOCUMENT NO. SD-85015-9005
SHEET NO. 1 OF 1
SIZE A3

THIS DRAWING CONTAINS INFORMATION THAT IS PROPRIETARY TO MOLEX INCORPORATED AND SHOULD NOT BE USED WITHOUT WRITTEN PERMISSION

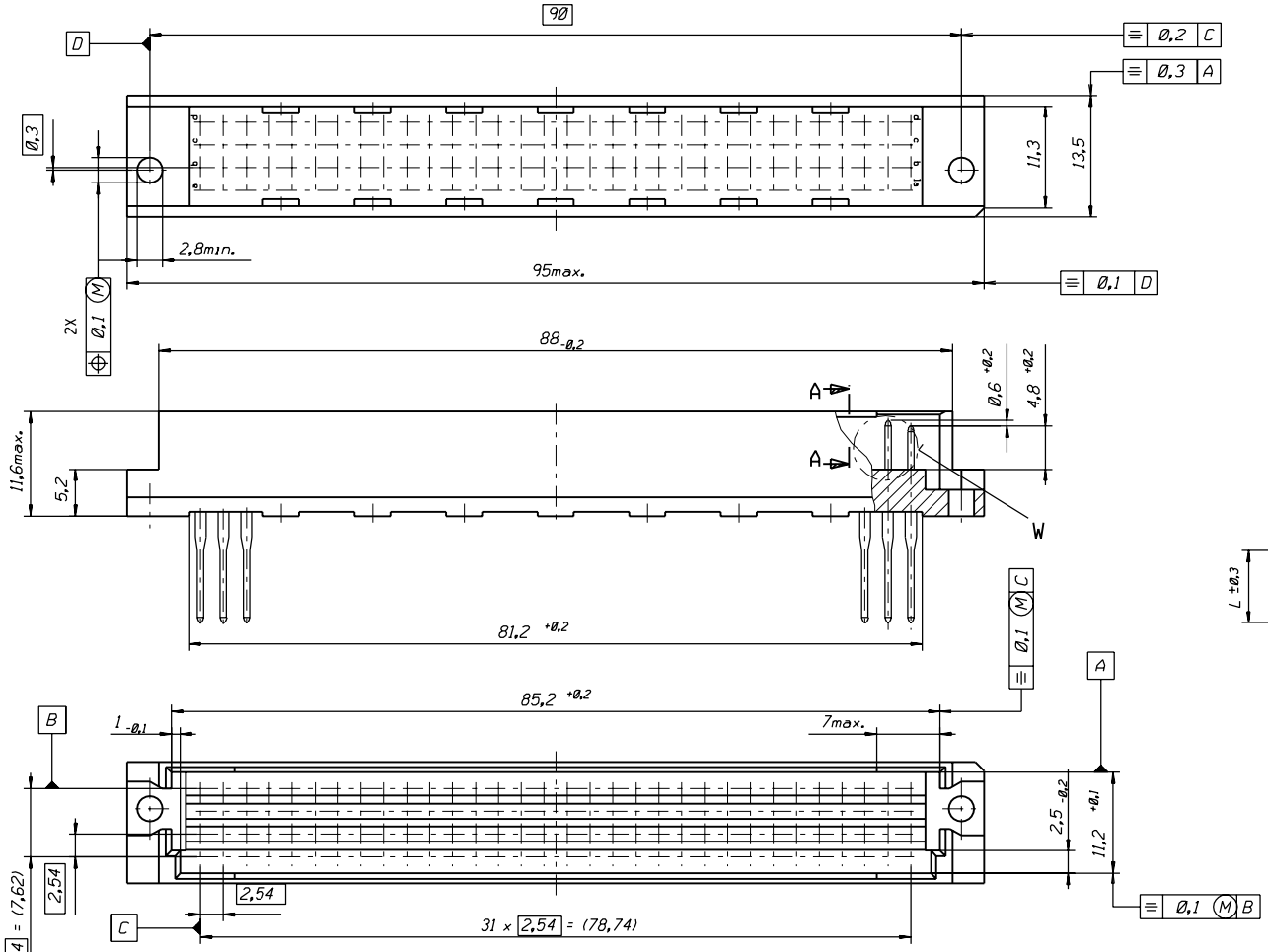

View X
5:1

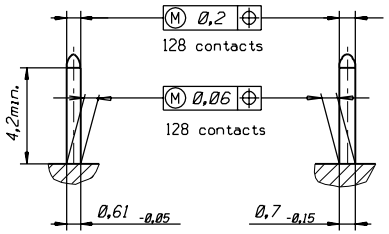

View W
5:1

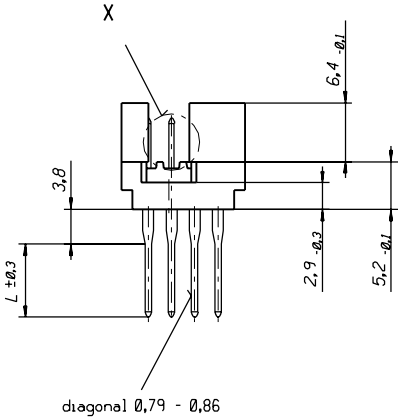

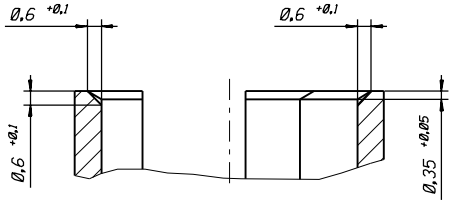

Section A - A
5:1

PART NO.
DWG. NO.

LTR	REVISIONS	
A	FOR PREVIOUS REVISIONS SEE MRI LIST	first release ECN No. MCI998-2790

FIRST ANGLE PROJECTION

UNLESS OTHERWISE SPECIFIED TOLERANCES: ANGULAR ± 2°

	INCH	METRIC
3 PLACE	± .	±
2 PLACE	± .	±
1 PLACE	± .	±

DRAFT WHERE APPLICABLE MUST REMAIN WITHIN DIMENSIONS

DESIGN DIMENSION ☒ MM ☐ IN.

EQUIVALENT DIMENSION ☐ MM ☐ IN.

IF TWO DIMENSIONS ARE SHOWN THE UPPER IS THE DESIGN DIMENSION, LOWER IS SECONDARY

DRWG BY	Ca	SIGN
CHK'D BY	KN	SIGN
APP'D BY	FB	SIGN
SCALE	2:1	

REVISE ONLY ON CAD SYSTEM | SH. | REV.

CADCAM PROJECT NAME 85015000 s11

THIS DRAWING CONTAINS INFORMATION THAT IS PROPRIETARY TO MOLEX INC. & SHOULD NOT BE USED WITHOUT WRITTEN PERMISSION

TITLE
128 pos. Male connector
DIN 41612 style R (C-Pin)
Dimensions

molex MOLEX EUROPE

SHEET NO. 1 OF | DATE 98/04/27

PART NO. | DWG NO. SDA-85015-0001 | SIZE B

7132-1283

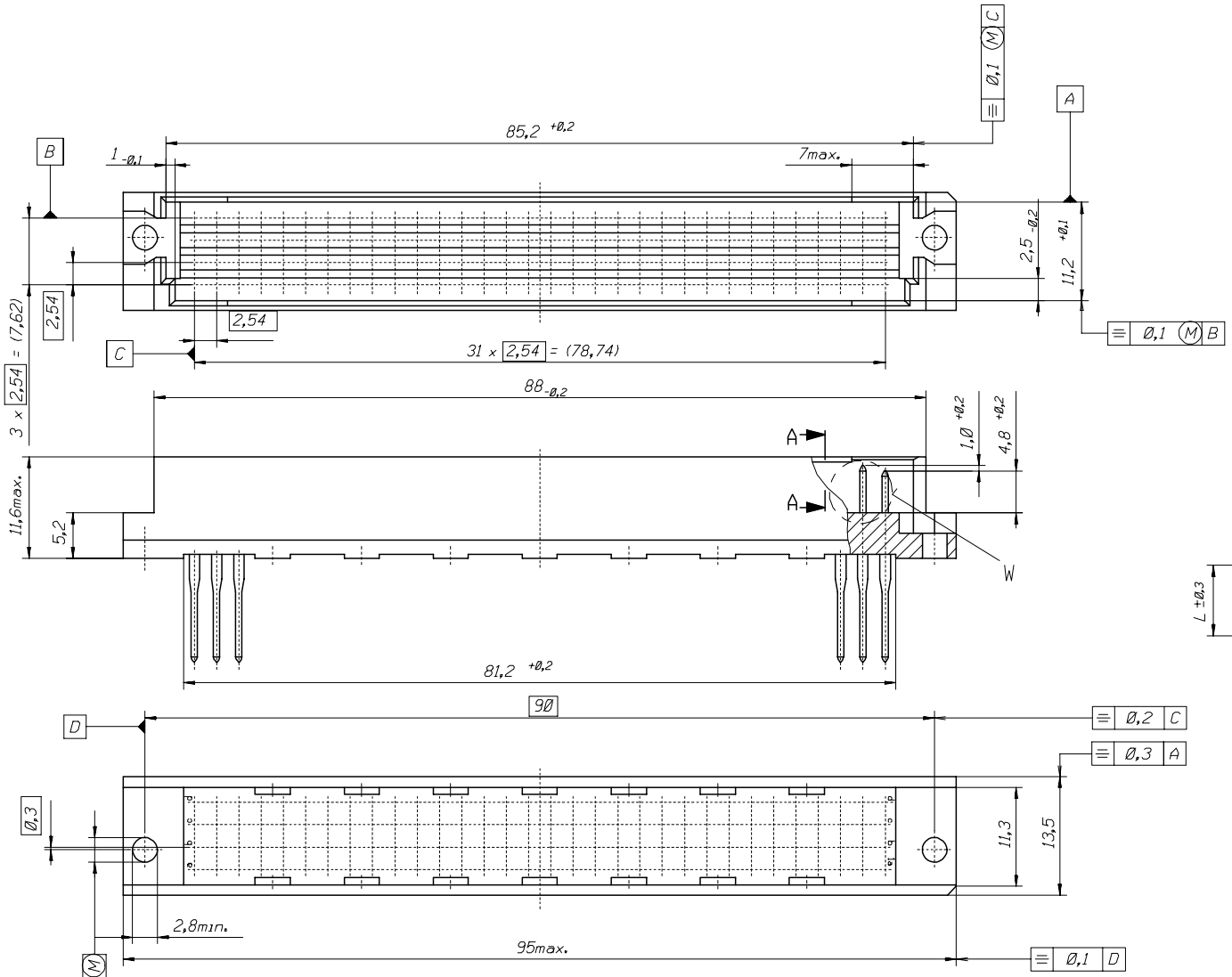

View X
5:1

View W
5:1

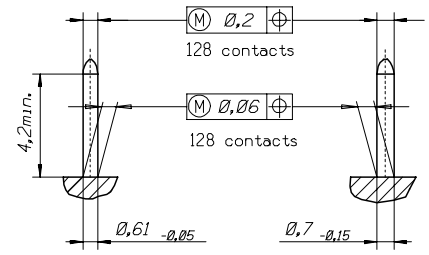

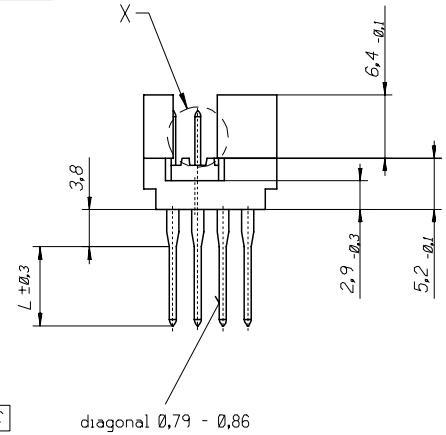

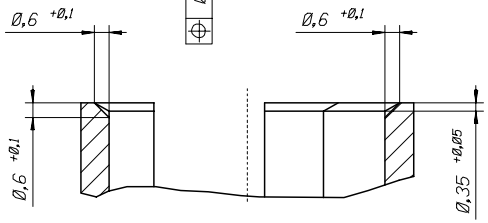

Section A - A
5:1

ENTER DESCRIPTION
EC NO: I2006-0310
DRWN:SSUDHIR 2005/12/01
CH'KD:KPRASAD 2005/12/02
APPR:KPRASAD 2005/12/02
DESCRIPTION
B
REV

QUALITY SYMBOLS
▼=0
▽=0

GENERAL TOLERANCES (UNLESS SPECIFIED)

	mm	INCH
4 PLACES	± ---	± ---
3 PLACES	± ---	± ---
2 PLACES	± ---	± ---
1 PLACE	± ---	± ---
ANGULAR ± 2 °		

DRAFT WHERE APPLICABLE MUST REMAIN WITHIN DIMENSIONS

DIMENSION STYLE: MM ONLY
SCALE: 2:1
DESIGN UNITS: METRIC
THIRD ANGLE PROJECTION

DRAWN BY	SH	DATE 2002/19/10
CHECKED BY	GJ	DATE 2002/19/10
APPROVED BY	GJ	DATE 2002/19/10
MATERIAL NO.	------	

TITLE: 128 POS MALE CONNECTOR DIN 41612 STYLE R (C-PIN) DIMENSIONS

molex MOLEX INCORPORATED

DOCUMENT NO. SDA-85015-0001
SHEET NO. 3 OF 3

SIZE A3

THIS DRAWING CONTAINS INFORMATION THAT IS PROPRIETARY TO MOLEX INCORPORATED AND SHOULD NOT BE USED WITHOUT WRITTEN PERMISSION