LOADING PATTERN MATING SIDE

	1	2	3	4	5	6	7	8	9	10	11	12	13	14	15	16	17	18	19	20	21	22	23	24	25
f	0	0	0	0	0	0	0	0	0	0	0				0	0	0	0	0	0	0	0	0	0	0
e	9	9	9	9	9	9	9	4	5	4	4				4	4	4	4	4	4	4	4	4	4	4
d	9	9	9	9	9	9	9	4	5	4	4				4	4	4	4	4	4	4	4	4	4	4
c	9	9	9	9	9	9	9	4	5	4	4				4	4	4	4	4	4	4	4	4	4	4
b	9	9	9	9	9	9	9	4	5	4	4				4	4	4	4	4	4	4	4	4	4	4
a	9	9	9	9	9	9	9	4	5	4	4				4	4	4	4	4	4	4	4	4	4	4
z	0	0	0	0	0	0	0	0	0	0	0				0	0	0	0	0	0	0	0	0	0	0
POS	01				05					10					15					20					25

LOADED CONNECTOR ASSEMBLY
(FOR EXAMPLE)

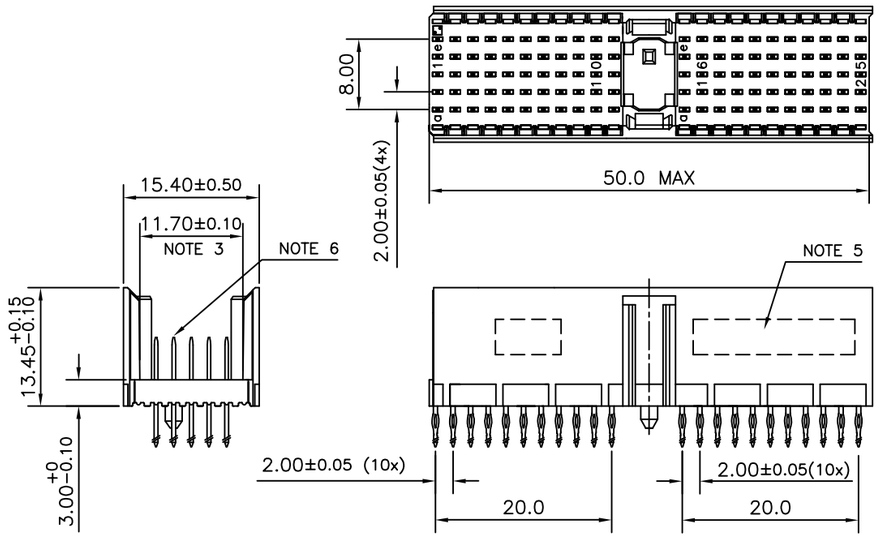

CONTACT OVERVIEW

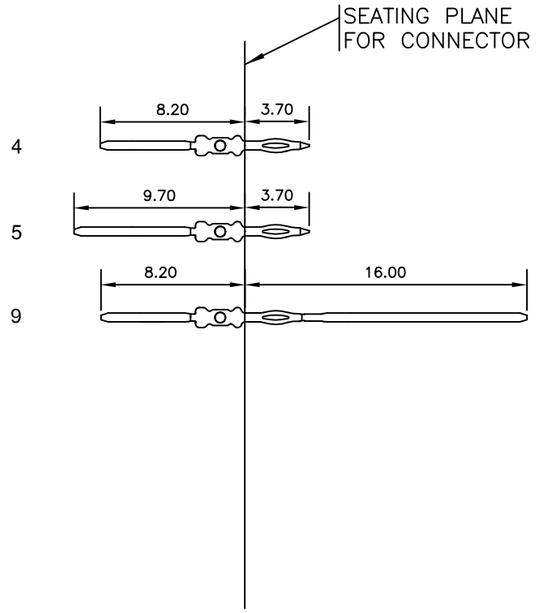

LAY-OUT P.C.B.-HOLE

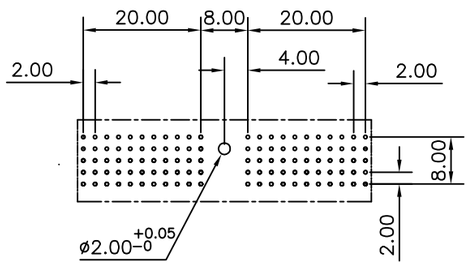

HM2P07PNU2K0- - -

LEAD FREE INDICATOR : LF = LEAD FREE
(DIGIT 15 & 16)

PLATING CODE (DIGIT 13 AND 14)
(REF DRW NO. BS,C , 201844 , 003)

NOTES

1. THIS PRODUCT IS CSA APPROVED.
2. THIS PRODUCT IS UL RECOGNIZED.
3. MEASURED AT THE BOTTOM.
4. MATERIAL CONTACT: PHOSPHORBRONZE
   HOUSING: CREAM WHITE GLASS FILLED POLYESTER UL-94V0
5. CONNECTOR PRINTED WITH P/N AND DATE CODE.
6. FOR ACTUAL CONTACT LOADINGS, SEE LOADING PATTERN MATING SIDE.
7. SHAPE OF CONNECTOR HOUSING CAN ALTER DEPENDING ON PRODUCTION LOCATION
8. THE PRODUCT (LF) MEETS EUROPEAN UNION DIRECTIVES AND OTHER COUNTRY REGULATIONS AS DESCRIBED IN GS-22-008
9. FOR RECOMMENDED PTH DIMENSIONS REFER DRAWING : BS, A , 201572 , 001

CATALOG NO: HM2P07PNU2K0- - - -

mat'l. code SEE NOTE 4				surface ISO 1302		tolerance ISO 406 ISO 1101	projection	product family MILLIPACS
ltr	ecn no	dr	date	tolerances unless otherwise specified				title
A	I03-0028	JAY	25/06/2003	angles	linear	.0±0.2	MM	MPACS 5+2R STR HDR PF CONN TYPE A
B	I05-0171	MNI	23/09/2005			.00±0.1		
C	I06-0077	MNI	21/06/2006	0°±1°		.000±.00X	scale –	
				dr	JAYADEEP P	24/06/2003		dwg no BS, C ,203028, 042 — sheet 1 of 1 — size A3
				engr	BIJU K PAUL	24/06/2003		
				chr	BIJU K PAUL	21/06/2006		
				appd	BIJU K PAUL	21/06/2006		type Product Customer Drawing
sheet index	revision	C						
	sheet	1						

FCIconnect.com
Copyright FCI

form: A3

PDM: Rev:C STATUS:Released Printed: Dec 03, 2007