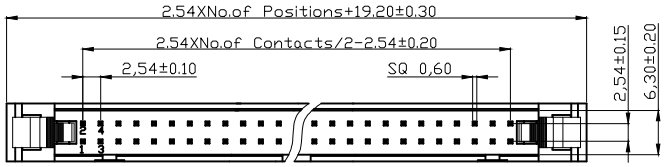

NOTES:

MATERIAL
1.Insulator Material:PBT+30%G.F,(UL94V-0),Grey
2.Contact Material : Brass
3.Contact Plating : 1u" Au selective Over Ni
ELECTRICAL
1.Current Rating : 3.0 AMP
2.Withstand Voltage : 1000V AC/minute
3.Contact Resistance : 20mΩ max
4.Insulation Resistance: 1000MΩ min
ENVIRONMENTAL
1.Operation Temperature: -40°C to +105°C
7 2.Packing : Tube
3.10P~18P with slot"M" without slot "N"
20P-64P with slot "M" and "N"

Ordering Information

AWH xxG-02x2-IDC

No. of Contacts : 10,14,16,20,26, 30,34,40,50,60,64

Latch Type
0 -without latch
2 -with short latches
3 -with long latches

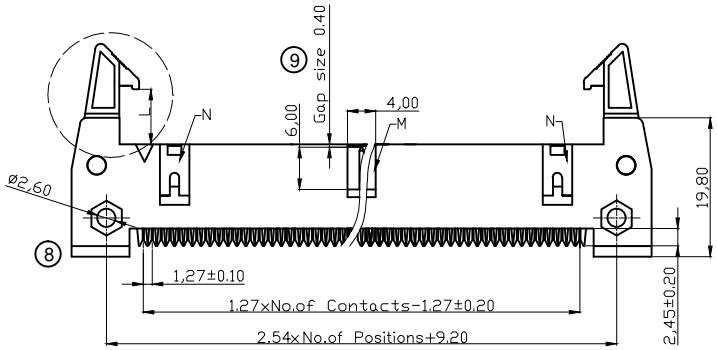

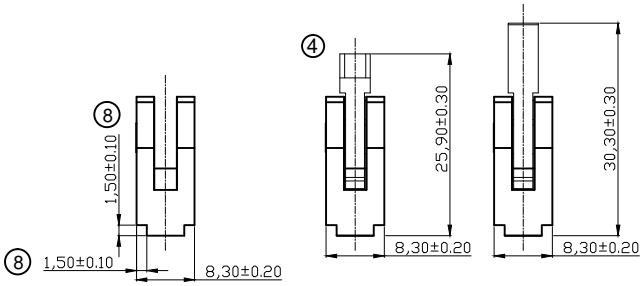

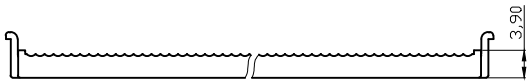

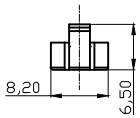

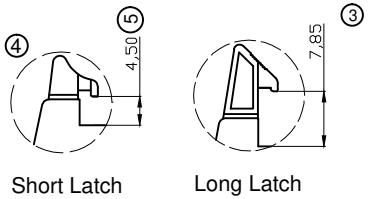

RoHS compliant
Unit: mm

6 File No.: E198287

Scale	Free
TOLERANCE	
X.X	±0.40
X.XX	±0.25
X.XXX	±0.15
ANGLE	±3°
DIM	TOL

Id.	Modification	Date	Name
9	Add gap size 0.40mm	28.06.2018	Xavier
8	Modify the shape of insulator	05.06.2017	Winnie
7	Change the packing tray into tube	21.09.2015	Winnie
6	Add UL file no.	12.12.2013	Winnie
5	Upddate	29.03.2013	Amy
4	Correct drawing of short latch	05.05.2010	Dean

	Date	Name
Drawn	25.01.2006	Alex
Approved	28.06.2018	Winnie

ASSMANN wsw components

Customer-No.

ASSMANN WSW-No.
AWH xxG-02x2-IDC

Drawing-No.
ASS 2231 CO

rev09

Replace

Sheet 1/1