THIS DRAWING IS UNPUBLISHED. RELEASED FOR PUBLICATION -,- .
© COPYRIGHT - BY TYCO ELECTRONICS CORPORATION. ALL RIGHTS RESERVED.

LOC	DIST
AD	00

REVISIONS

P	LTR	DESCRIPTION	DATE	DWN	APVD
	C	EC 0G3C 0224 05	04MAY05	BSV	JLG

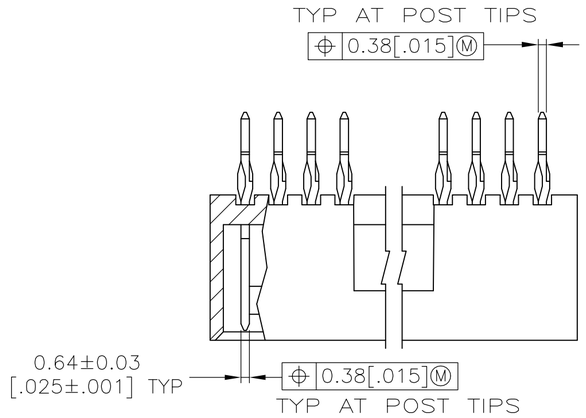

1. THE NOTED DIMENSIONS APPLY AT THE INTERSECTION OF THE POST AND HOUSING
2. POINT OF MEASUREMENT FOR PLATING THICKNESS
3. HOUSING: FLAME RETARDANT THERMOPLASTIC, COLOR–BLACK
4. POSTS: CU–NI–SN
5. POSTS: 0.000762 [.000030] GOLD ON CONTACT AREA, 0.00254–0.00508 [.000100–.000200] MATTE TIN LEAD ON SOLDER TAIL, ALL OVER 0.00127 [.000050] NICKEL.
6. POSTS: 0.000762 [.000030] GOLD ON CONTACT AREA, 0.00254–0.00508 [.000100–.000200] MATTE TIN ON SOLDER TAIL, ALL OVER 0.00127 [.000050] NICKEL.

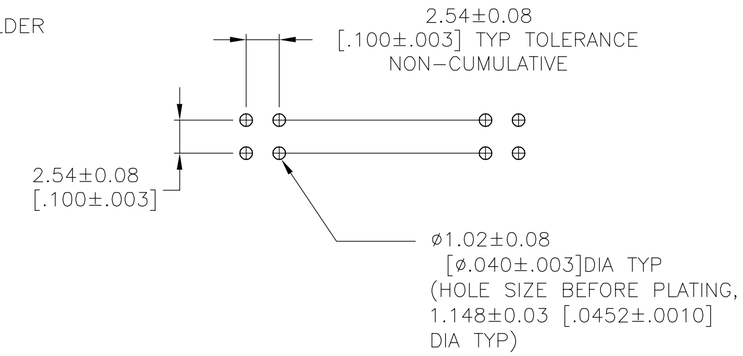

RECOMMENDED HOLE LAYOUT

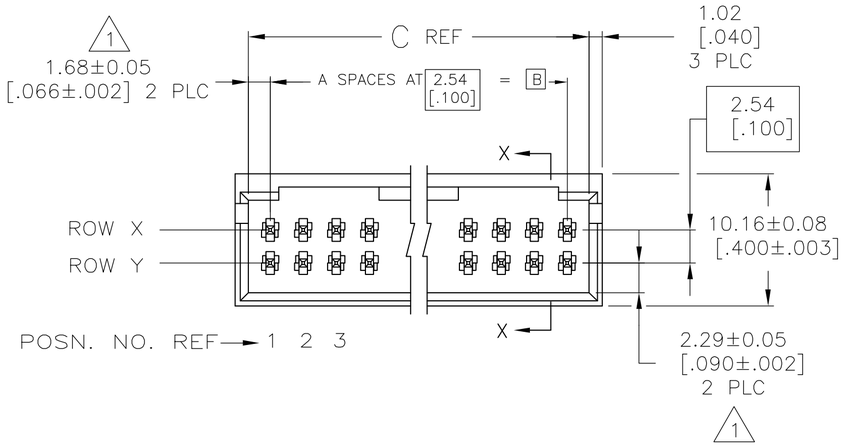

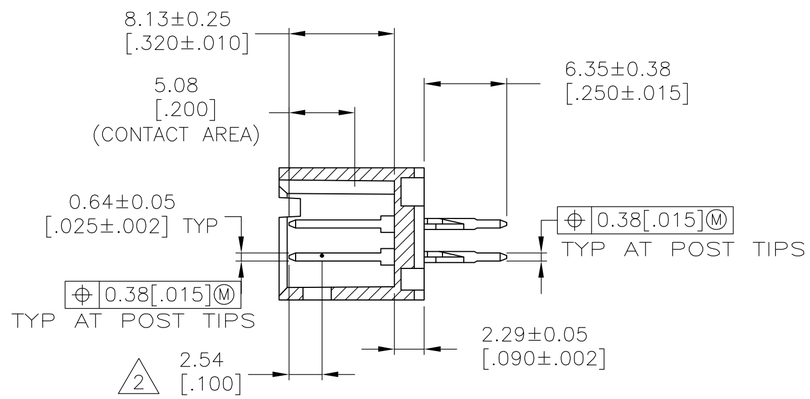

SECTION X–X

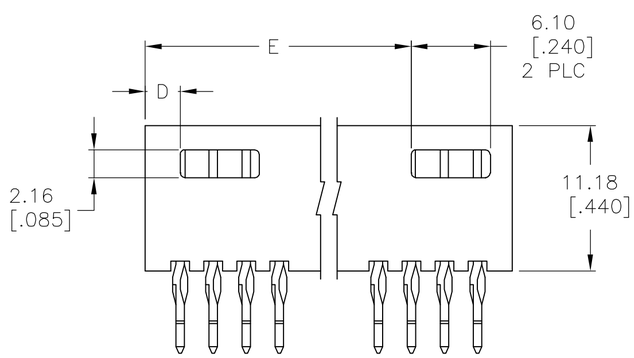

6	5,15,20,25	8,13	58.57 [2.306]	2.69 [.106]	64.31 [2.532]	60.96 [2.400]	24	50	5–147078–4
6	1,6,11,21	13,18	58.57 [2.306]	2.69 [.106]	64.31 [2.532]	60.96 [2.400]	24	50	5–147078–3
6	9	9,10	20.47 [.806]	2.69 [.106]	26.21 [1.032]	22.86 [.900]	9	20	5–147078–2
6	2,4,9	2,4,9	20.47 [.806]	2.69 [.106]	26.21 [1.032]	22.86 [.900]	9	20	5–147078–1
5	5,15,20,25	8,13	58.57 [2.306]	2.69 [.106]	64.31 [2.532]	60.96 [2.400]	24	50	147078–4
5	1,6,11,21	13,18	58.57 [2.306]	2.69 [.106]	64.31 [2.532]	60.96 [2.400]	24	50	147078–3
5	9	9,10	20.47 [.806]	2.69 [.106]	26.21 [1.032]	22.86 [.900]	9	20	147078–2
5	2,4,9	2,4,9	20.47 [.806]	2.69 [.106]	26.21 [1.032]	22.86 [.900]	9	20	147078–1
PLATING	ROW Y	ROW X	E	D	C	B	A	NO OF POSN	ASSEMBLY PART NUMBER
	POSTS OMITTED								

THIS DRAWING IS A CONTROLLED DOCUMENT.

DIMENSIONS: mm [INCHES]

TOLERANCES UNLESS OTHERWISE SPECIFIED:
0 PLC ± –
1 PLC ± –
2 PLC ± 0.13[.005]
3 PLC ± –
4 PLC ± –
ANGLES ± –

MATERIAL 3 4

FINISH SEE TABLE

DWN B. HAYMAKER 18AUG98
CHK J. GESFORD 18AUG98
APVD J. GESFORD 18AUG98
PRODUCT SPEC —
APPLICATION SPEC —
WEIGHT —

tyco Electronics
Tyco Electronics Corporation
Harrisburg, Pa 17105–3608

NAME
HDR ASSY, MOD II, ACTION
PIN, DBL ROW, .100X.100 C/L,
4 SIDED SHROUD, SELECT LOAD

SIZE	CAGE CODE	DRAWING NO	RESTRICTED TO
A2	00779	C–147078	—

CUSTOMER DRAWING | SCALE 3:1 | SHEET 1 OF 1 | REV C

147078