Mallory Sonalert Products Inc.	Part #	PK-20A35EW-24VQ
Sales Outline Drawing	Revision	C

May not be suitable for all Medical and Aerospace applications.
Contact Mallory Sonalert to discuss your application.

Oscillation Frequency (Hz)	3500 ± 500
Operating Voltage (Vdc)	12 ~ 28
Rated Voltage (Vdc)	24
Current Consumption (mA/max)	20 at Rated Voltage
Sound Pressure Level (dB/min)	95 at 30cm at Rated Voltage
Tone/Pulse Rate	Constant
Operating Temperature (°C)	-20 ~ +70
Storage Temperature (°C)	-30 ~ +80
Housing	ABS 757 plastic resin (Color: Black)
Lead Wires	28 AWG
Weight (Grams)	8.4
Mounting - Panel	Use 20-22 mm hole.
Mounting - Flange	Use 33.5 mm spaced 1/8” max hole.
Options	For other options contact factory

Dimensions: (units: mm) **ROHS Compliant**

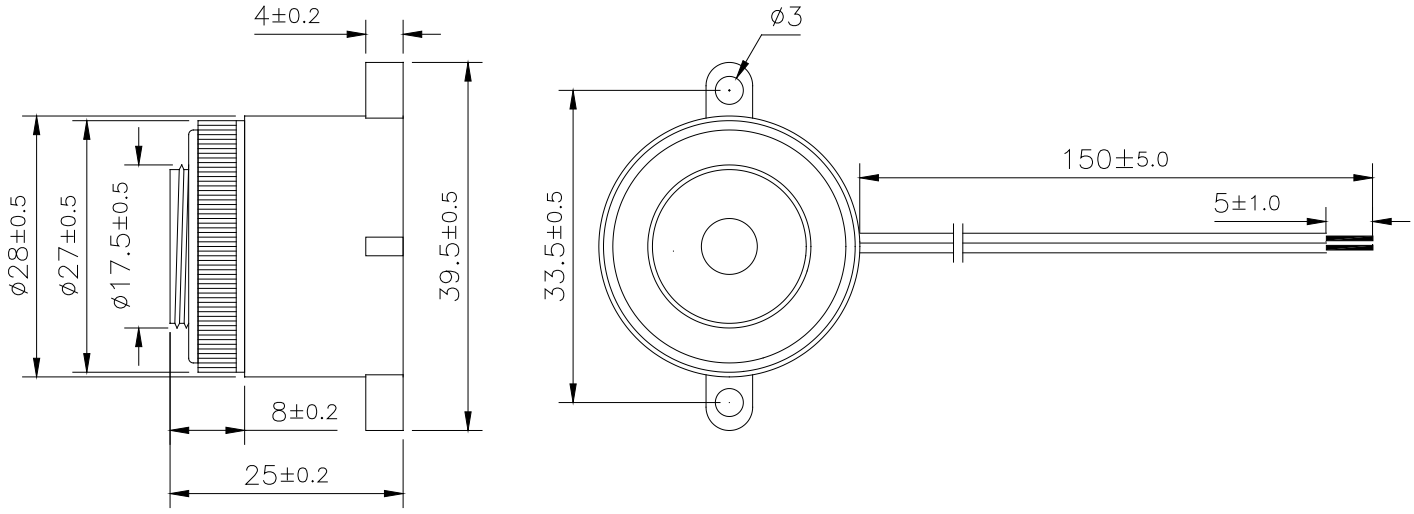

4411 South High School Road, Indianapolis, Indiana 46241 USA ● Phone (317) 612-1000 ● Fax (317) 612-1010 ● http://www.mspindy.com