THIS DRAWING IS UNPUBLISHED. RELEASED FOR PUBLICATION -,- .
© COPYRIGHT - BY TYCO ELECTRONICS CORPORATION. ALL RIGHTS RESERVED.

LOC	DIST
FT	0

REVISIONS

P	LTR	DESCRIPTION	DATE	DWN	APVD
	0	REVISED PER 0G3B-0619-04	7/16/04	SS	SH

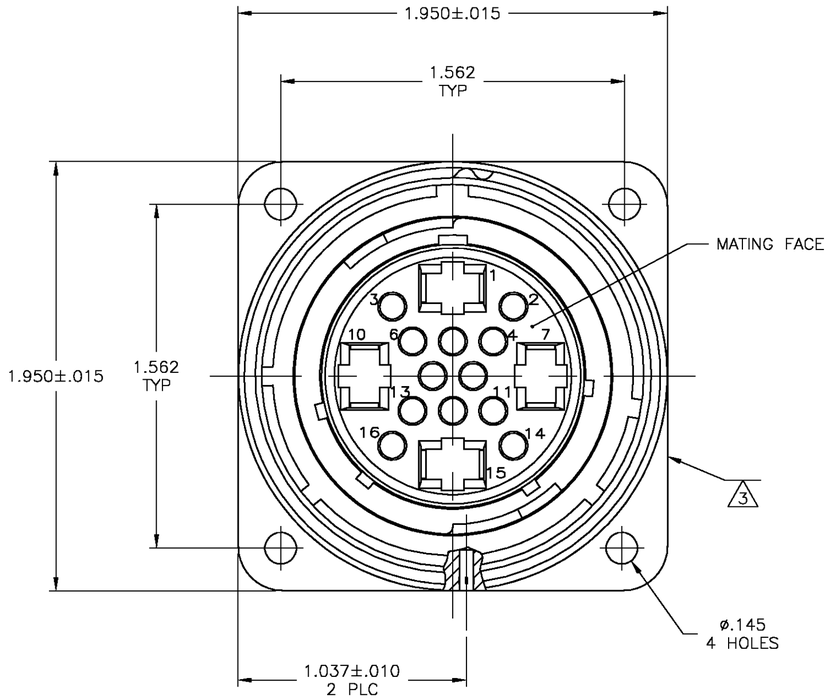

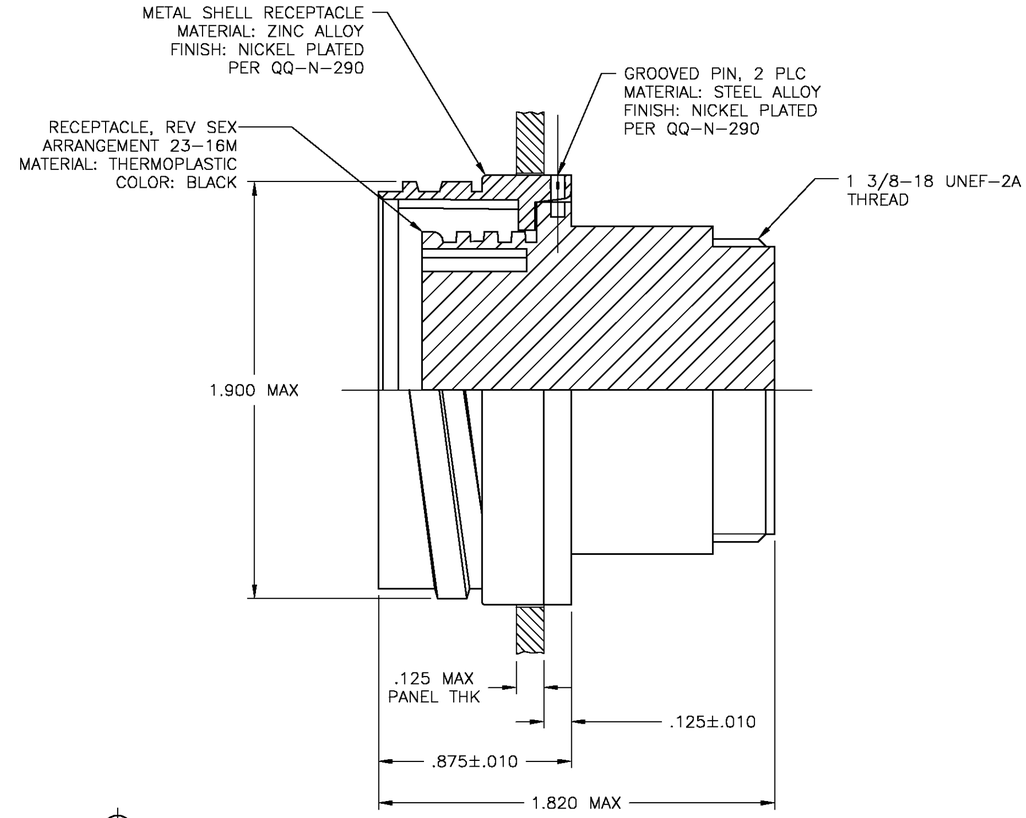

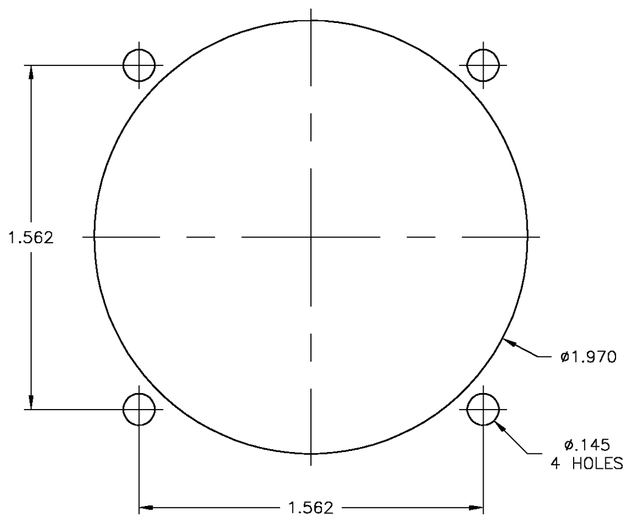

REAR MOUNTED PANEL CUTOUT

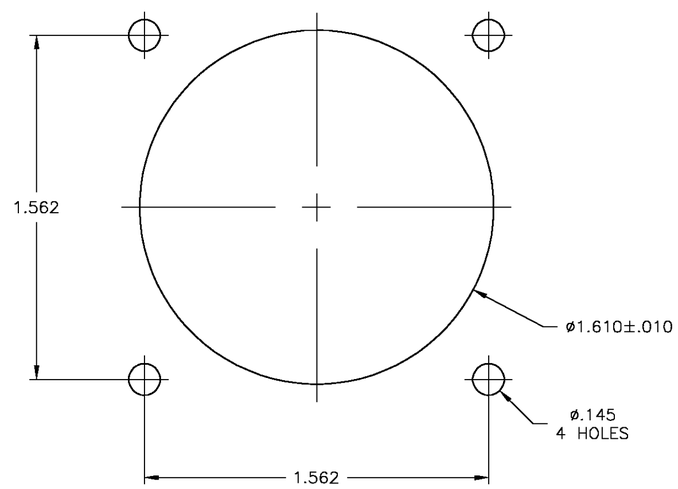

FRONT MOUNTED PANEL CUTOUT

NOTES:

1. THIS CONNECTOR ACCEPTS (12) MULTIMATE SOCKET CONTACTS AND (4) TYPE XII FEMALE CONTACTS.
2. RECEPTACLE MATES WITH 1776089-1.
3. AMP PART NUMBER AND DATE CODE TO BE LOCATED ON EDGE OF FLANGE.

1776088-1
PART NUMBER

THIS DRAWING IS A CONTROLLED DOCUMENT.

DIMENSIONS: INCHES

TOLERANCES UNLESS OTHERWISE SPECIFIED:
0 PLC ± -
1 PLC ± -
2 PLC ± -
3 PLC ± .005
4 PLC ± -
ANGLES ± -

MATERIAL -
FINISH -

DWN S SCHLEGEL 5/25/04
CHK S HEADER 5/25/04
APVD S HEADER 5/25/04
PRODUCT SPEC -
APPLICATION SPEC -
WEIGHT -

Tyco Electronics Corporation
Harrisburg, Pa 17105-3608

NAME
RECEPTACLE ASSEMBLY, REV SEX,
SERIES 1, 28-16, CMC
-

SIZE	CAGE CODE	DRAWING NO	RESTRICTED TO
A2	00779	C-1776088	-

CUSTOMER DRAWING | SCALE 2:1 | SHEET 1 OF 1 | REV 0

1776088

AMP 1471-9 REV 31MAR2000