SERPAC M8

Electronic Enclosures

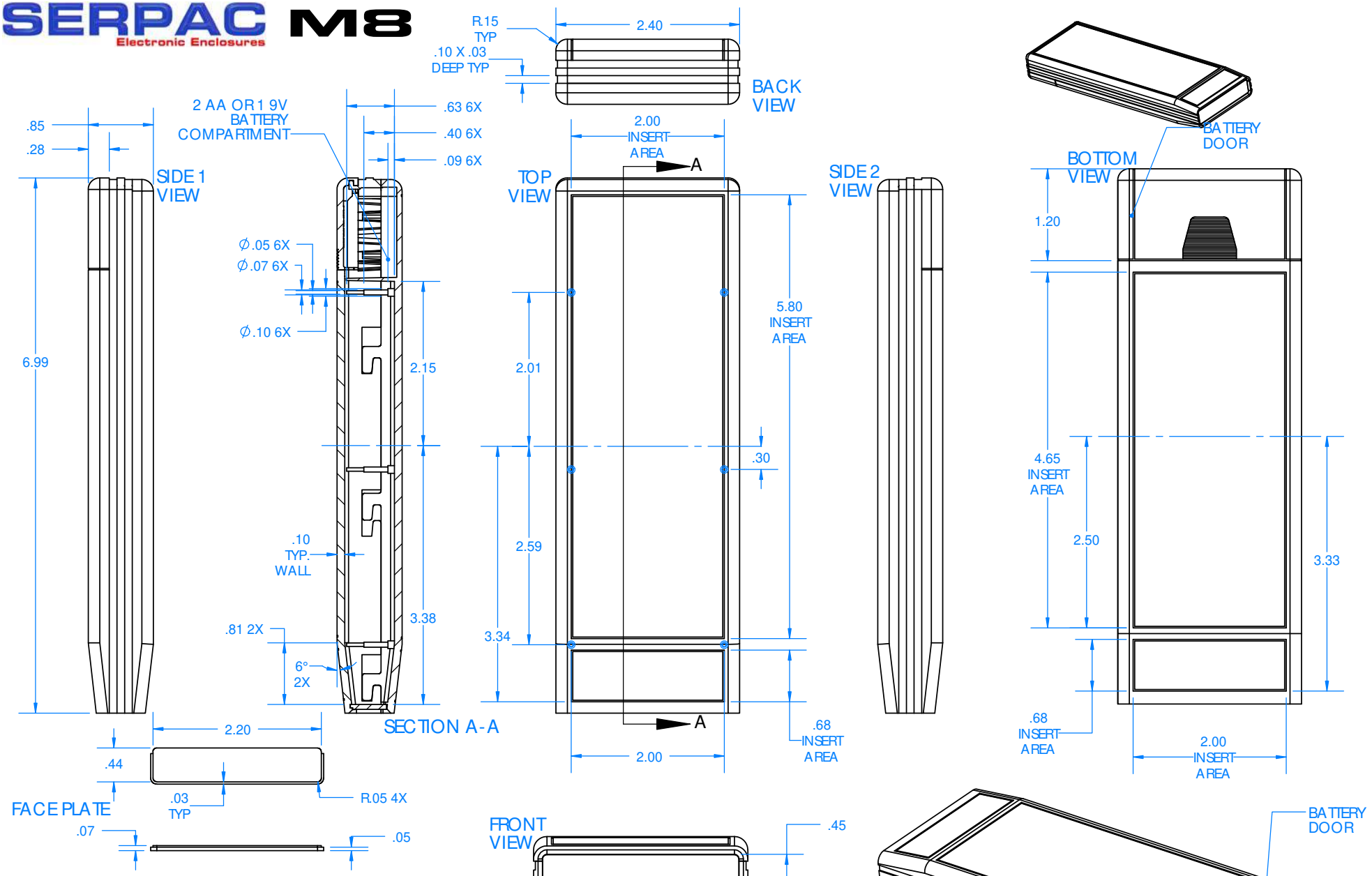

PART NO.	DESCRIPTION (Included)	ACCSESSORIES (Optional)	
4009	TOP	PART NO.	DESCRIPTION
4010	BOTTOM	4008CL	CLEAR FACE PLATE
4007	BATTERY COVER	4008IR	INFRARED FACE PLATE
4008	FACE PLATE	4008R	CLEAR READ FACE PLATE
72	BATTERY CLIP (single)	1030	POCKET CLIP
73	BATTERY CLIP (double)		
6003	#2 X .5" SCREWS (2)		
4013	9V INSERT (spacer)		

Notes: Enclosure weight .099 lbs / 45 gm
1) Enclosure meets or exceeds IP40 and NEMA 1
2) All components are RoHS Compliant.
3) Circuit Board drawings can be download at: www.Serpac.com Accessories page.

ALL DIMENSIONS ARE ± .010" ***2/17/2017***

2009 Wright Ave. La Verne, CA 91750

Ph. (626) 331-0517 Fx. (626) 331-8584 serpac.com