45485

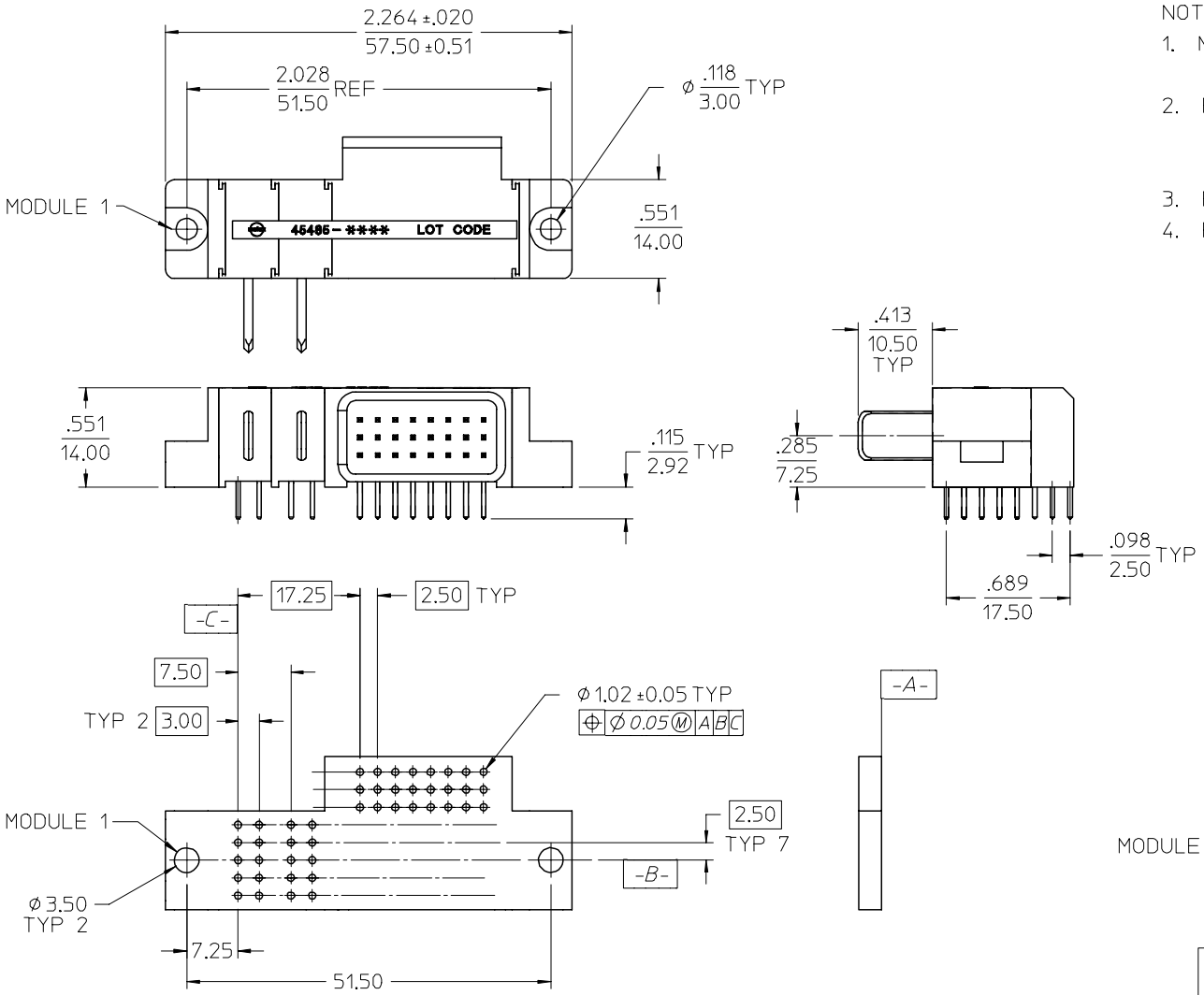


NOTES:

1. MATERIAL: LCP, GLASS FILLED, UL94V-0, BLACK.
   CONTACTS: COPPER ALLOY
2. FINISH: SELECT GOLD: 30 MI MIN.
   SELECT TIN: 100 MI MIN.
   BOTH OVER NICKEL.
3. PRODUCT SPECIFICATION: PS-45424-001.
4. PACKAGING SPECIFICATION: PK-45485-001.

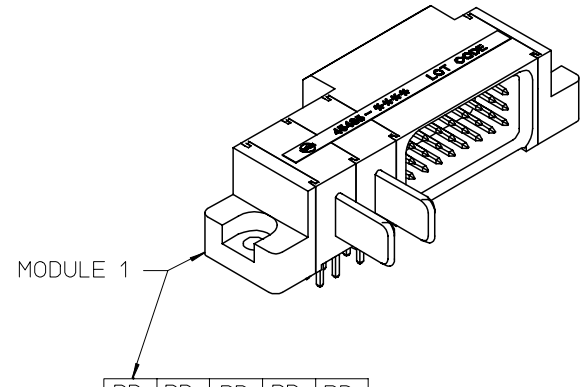


| PD | PD | PD | PD | PD |
|---|---|---|---|---|
| 500 | 105 | 105 | 334 | 501 |

PCB LAYOUT: COMPONENT SIDE
PCB THICKNESS: .062/1.57 MIN
PCB TOLERANCE: ±.002/0.05

EC NO: UCP2005-2176
DRWN: ADRATNOL 2005/05/13
CH'KD: SAMIEC 2005/05/16
APPR: YMARGULI 2005/05/18
DESCRIPTION

A1
REV

GENERAL TOLERANCES (UNLESS SPECIFIED)

| | mm | INCH |
|---|---|---|
| 4 PLACES | ± --- | ± --- |
| 3 PLACES | ± --- | ± .010 |
| 2 PLACES | ± 0.25 | ± .015 |
| 1 PLACE | ± 0.38 | ± --- |
| ANGULAR ±1/2° | | |

DRAFT WHERE APPLICABLE
MUST REMAIN
WITHIN DIMENSIONS

SCALE 1:1
DESIGN UNITS METRIC
THIRD ANGLE PROJECTION
REVISE ON CAD ONLY
DIMENSION STYLE IN/MM
DRAWN BY DRATNOL DATE 2004/10/28
CHECKED BY SAMIEC DATE 2004/10/28
APPROVED BY MARGULIS DATE 2004/10/28

TITLE
POWER DOCK ASSEMBLY
POWER
RIGHT ANGLE SOLDER TAIL

molex MOLEX INCORPORATED

MATERIAL NO. 45485-0215
DOCUMENT NO. SD-45485-215
SHEET NO. 1 OF 1

THIS DRAWING CONTAINS INFORMATION THAT IS PROPRIETARY TO MOLEX INCORPORATED AND SHOULD NOT BE USED WITHOUT WRITTEN PERMISSION

A

tb_frame_A
rev. B1 2000/08/01