RoHS 2015/863/EU REACH compliant Conflict minerals free AEC-Q200

GEYER quartz technology

Quartz Crystal

SMD-version

part no.	12.88565
model	KX – 7E
frequency	8.0 MHz
mode	fundamental
operating temperature	-40° ~ +125°C
storage temperature	-40° ~ +125°C
frequency tolerance at +25°C	±30 ppm
temperature tolerance -40° ~ +125°C	±50 ppm
load capacitance C_L	12 pF
series resistance R1 max.	400 Ohm
aging at +25°C (first year) max.	±2 ppm
shunt capacitance C_0 max.	3.5 pF
drive level max.	200 µW
AEC-Q200	yes
contents of reel	3000 pcs.

Dimensions (mm):

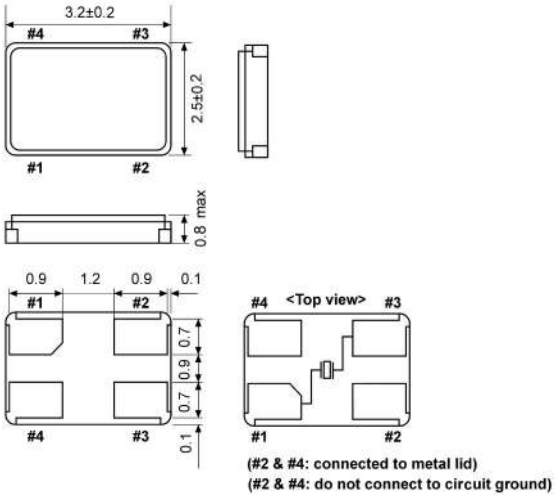

Reflow soldering condition:

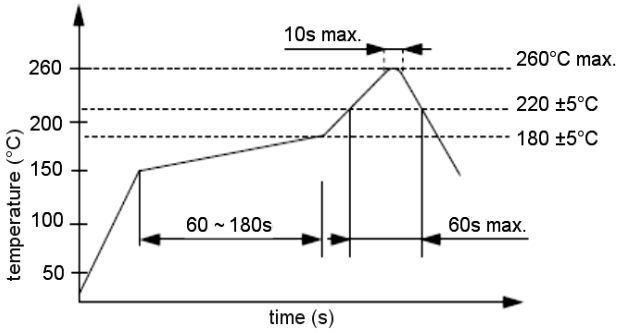

Suggested soldering pad:

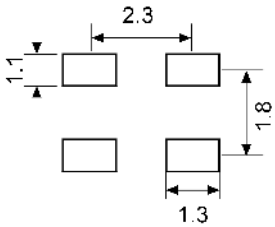

Tape specification:

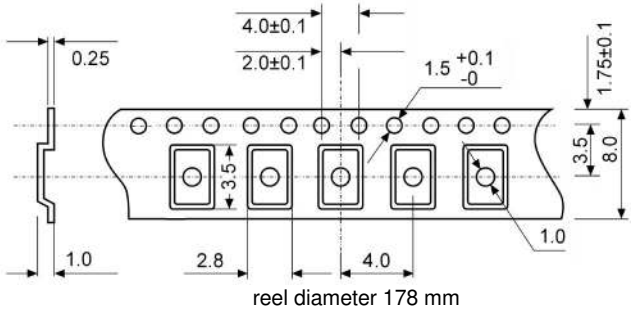

GEYER ELECTRONIC e.K. Lochhamer Schlag 5 82166 Gräfelfing/München
Tel. +49 89 546868-0 quartz@geyer-electronic.de www.geyer-electronic.de