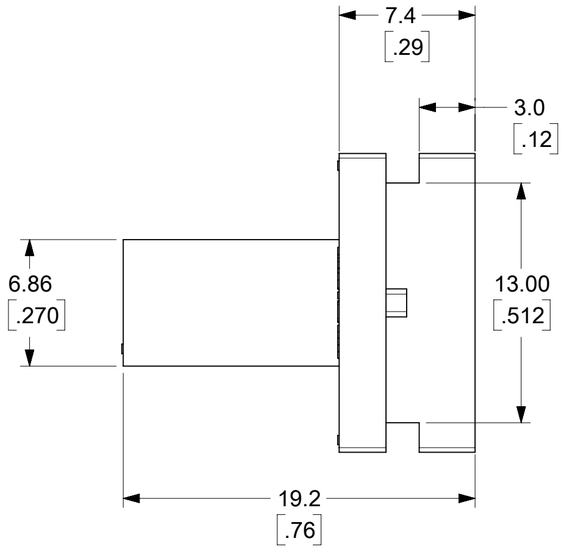


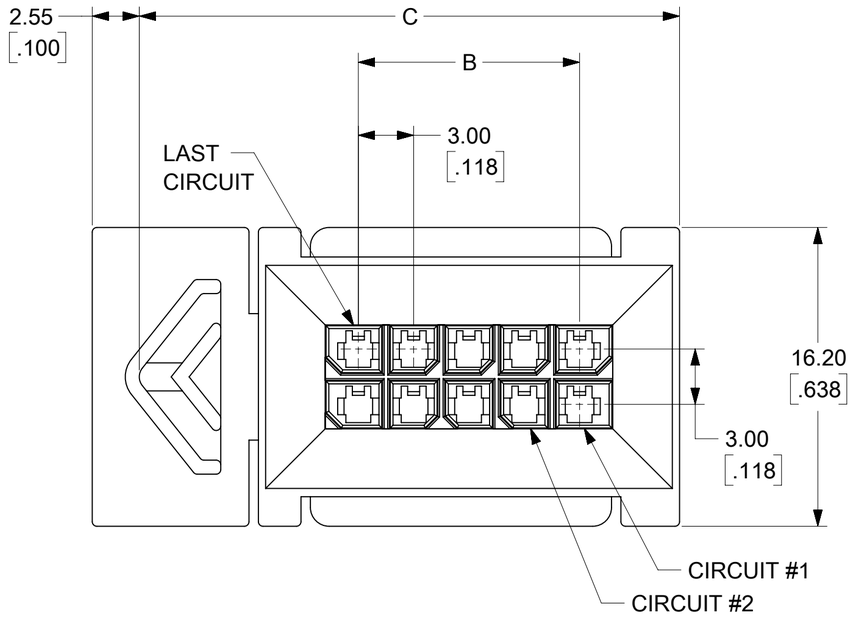


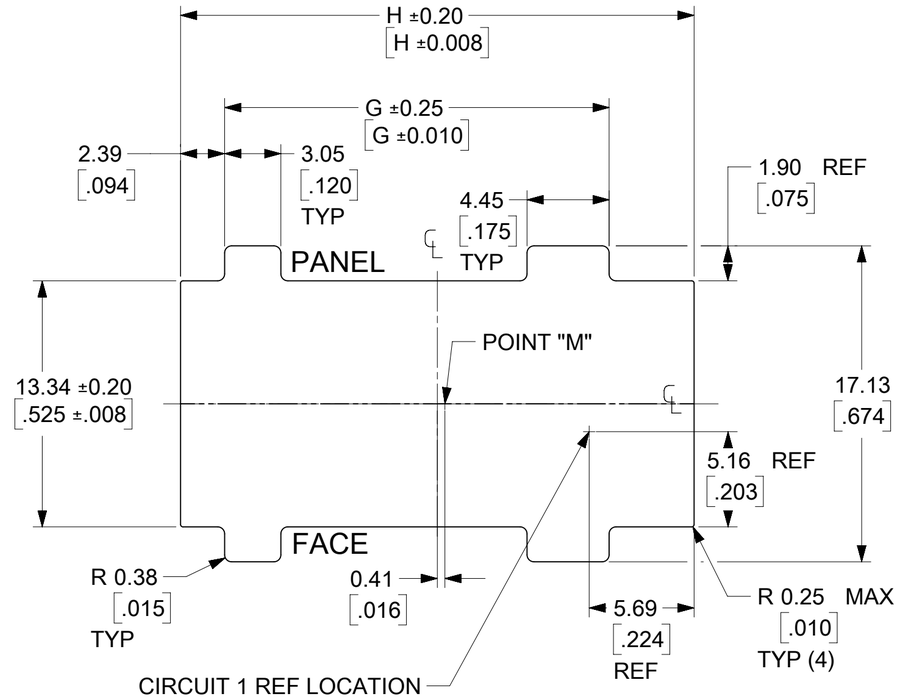


RECOMMENDED PANEL CUTOUT

(SEE NOTES 7 & 8)

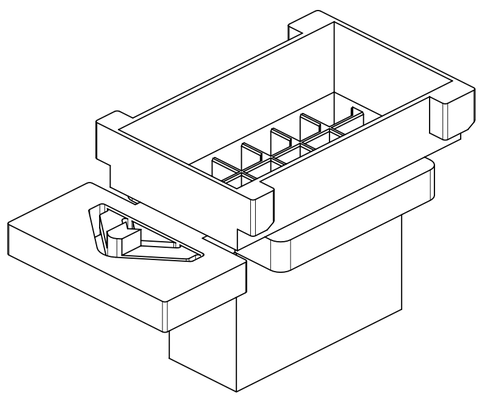

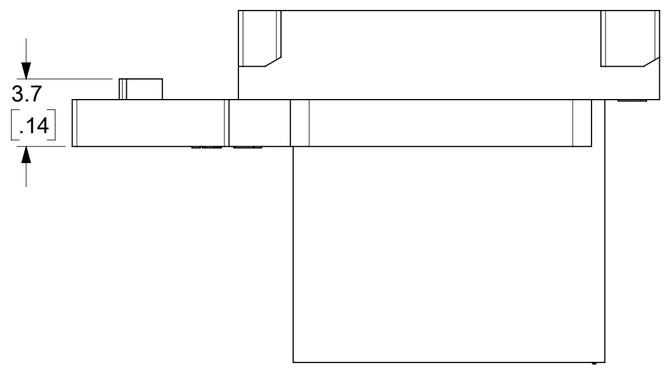


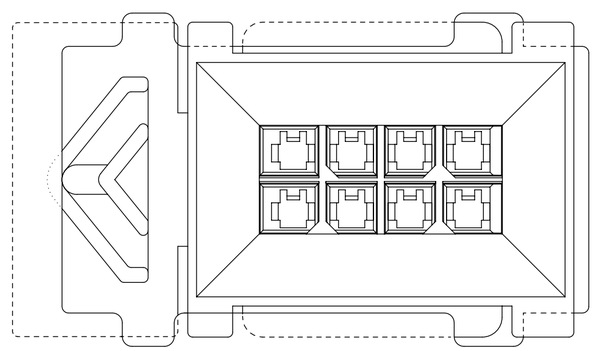

PLUG SHOWN MOUNTED IN PANEL

| CIRCUIT SIZE | MATERIAL NUMBER | DIM "B" | DIM "C" | DIM "G" | DIM "H" |
|---|---|---|---|---|---|
| 4 | | 3.00 / .118 | 20.5 / .81 | 14.85 / .585 | 21.05 / .829 |
| 6 | | 6.00 / .236 | 23.5 / .93 | 17.85 / .703 | 24.05 / .947 |
| 8 | | 9.00 / .354 | 26.5 / 1.04 | 20.85 / .821 | 27.05 / 1.065 |
| 10 | 44300-1011 | 12.00 / .472 | 29.5 / 1.16 | 23.85 / .939 | 30.05 / 1.183 |
| 12 | | 15.00 / .591 | 32.5 / 1.28 | 26.85 / 1.057 | 33.05 / 1.301 |
| 14 | | 18.00 / .709 | 35.5 / 1.40 | 29.85 / 1.175 | 36.05 / 1.419 |
| 16 | | 21.00 / .827 | 38.5 / 1.52 | 32.85 / 1.293 | 39.05 / 1.537 |
| 18 | | 24.00 / .945 | 41.5 / 1.63 | 35.85 / 1.411 | 42.05 / 1.656 |
| 20 | | 27.00 / 1.063 | 44.5 / 1.75 | 38.85 / 1.530 | 45.05 / 1.774 |
| 22 | | 30.00 / 1.181 | 47.5 / 1.87 | 41.85 / 1.648 | 48.05 / 1.892 |
| 24 | | 33.00 / 1.299 | 50.5 / 1.99 | 44.85 / 1.766 | 51.05 / 2.010 |

| DOCUMENT STATUS | P1 | RELEASE DATE | 2021/10/21 16:18:10 |
|---|---|---|---|

NOTES:

1. MATERIAL: UNFILLED NYLON, UL94V-0, IEC 60335-1 GLOW WIRE CAPABLE, COLOR: BLACK.
2. FINISH: N/A
3. PRODUCT SPECIFICATION: PS-44300-001
4. PACKAGING SPECIFICATION: PK-44300-001
5. THIS PLUG MATES WITH MOLEX BMI RECEPTACLE SERIES 44133 AND BMI RECEPTACLE HEADERS SERIES 44764 AND 44769.
6. THIS PLUG TO BE USED WITH MOLEX MALE CRIMP TERMINALS ONLY. 43031-0xxx
7. THIS PLUG IS DESIGNED FOR USE WITH .062/1.57 MAX. TO .050/1.27 MINIMUM THICK PANELS.
8. WHEN MATING WITH 44133 SERIES, POINT "M" MUST ALIGN WITH THE PANEL CUT-OUT CENTERLINES DEFINED BY MOLEX DRAWING SD-44133-001.
9. HOUSING MAY EXHIBIT A SURFACE IMPERFECTION KNOWN AS "SINK MARKS" UP TO .024/0.60 MAX. THIS IS A COSMETIC DEFECT AND DOES NOT AFFECT FUNCTION OF THE CONNECTOR.
10. THIS PART CONFORMS TO CLASS 'B' REQUIREMENTS OF COSMETIC SPECIFICATION PS-45499-002.

FUNCTIONAL SYMBOLS: FA = 0, FC = 0, FP = 0

DIVISIONAL SYMBOLS

THIS DRAWING CONTAINS INFORMATION THAT IS PROPRIETARY TO MOLEX ELECTRONIC TECHNOLOGIES, LLC AND SHOULD NOT BE USED WITHOUT WRITTEN PERMISSION

DIMENSION UNITS: MM/INCH — SCALE: NTS

GENERAL TOLERANCES (UNLESS SPECIFIED)

| | MM | INCH |
|---|---|---|
| 4 PLACES | ± | ± |
| 3 PLACES | ± | ± 0.01 |
| 2 PLACES | ± 0.25 | ± 0.014 |
| 1 PLACE | ± 0.35 | ± |
| 0 PLACES | ± | ± |
| ANGULAR TOL | ± 0.5 ° | |

DRAFT WHERE APPLICABLE MUST REMAIN WITHIN DIMENSIONS

CURRENT REV DESC: RELEASED

EC NO: 679281
DRWN: MKIPPER 2020/10/22
CHK'D: HENRYA1 2021/10/15
APPR: FSMITH 2021/10/21

INITIAL REVISION:
DRWN: MKIPPER 2020/10/22
APPR: FSMITH 2021/10/21

THIRD ANGLE PROJECTION | DRAWING: C-SIZE | SERIES: 44300

molex

MICROFIT 3.0 BMI DUAL ROW PLUG, PANEL MOUNT, V-0 AND GLOW WIRE

PRODUCT CUSTOMER DRAWING

| DOCUMENT NUMBER | DOC TYPE | DOC PART | REVISION |
|---|---|---|---|
| 443000011-SD | PSD | 000 | A |

| MATERIAL NUMBER | CUSTOMER | SHEET NUMBER |
|---|---|---|
| SEE CHART | GENERAL MARKET | 1 OF 1 |

FORMAT: Eng-lega-master-tb-prod-C
REVISION: E
DATE: 2020/01/14