THIS COPY IS PROVIDED ON A RESTRICTED BASIS AND IS NOT TO BE USED IN ANY WAY DETRIMENTAL TO THE INTERESTS OF PANDUIT CORP.

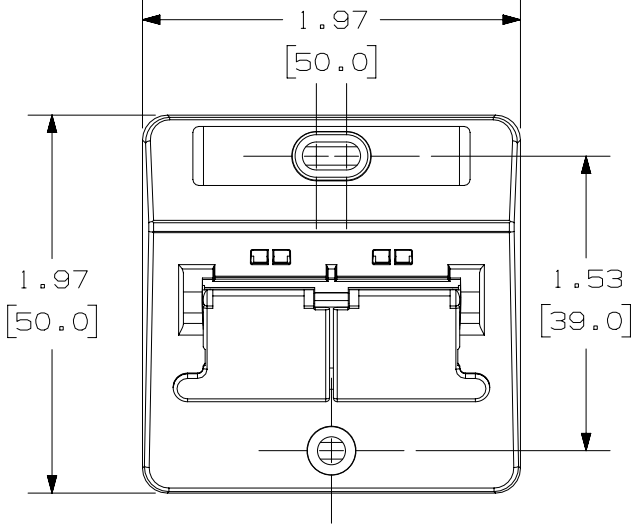

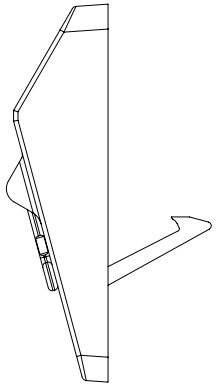

PANDUIT P/N	WEIGHT
CS2S6XTG**	.79 LB/10 PCS (356.5g/10 PCS)

NOTES:
1. SEE WEBSITE FOR ADDITIONAL PART NUMBER SUFFIXES TO INDICATE COLOR AND OR PACKAGE QUANTITY.
2. SEE CATALOG FOR COMPLETE LIST OF PARTS APPLICABLE FOR USE WITH THIS PART.
3. PART INCLUDES:
   1- FACEPLATE(CHES2S**Y)
   1- LABEL/ LABEL COVER
   2- MOUNTING SCREW
   1- METAL MOUNTING PLATE
4. DIMENSIONS IN [ ] ARE IN METRIC.
5. MODULES DO NOT COME INSTALLED.

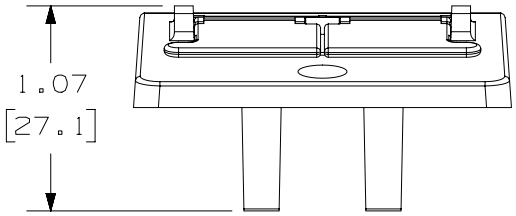

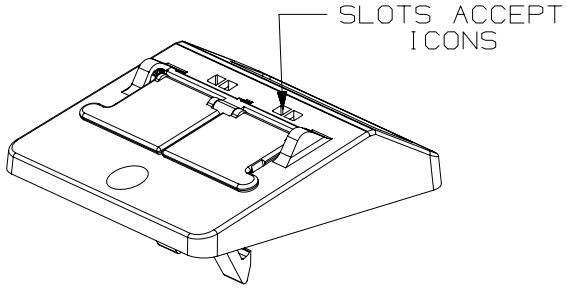

REV	DATE	BY	CHK	APR	DESCRIPTION	ECN
00A	11-30-17	BJN	ROJC	MMR	RELEASED TO PRODUCTION	00452NAC-DC03

PART NUMBER: CS2S6XTG**

TITLE: MINI-COM 2 POSITION SLOPED SHUTTERED GERMAN ADAPTER KIT

CUSTOMER DRAWING

ITEM REVISION NAME: 00452NAC/00

DATASET FILE NAME: 00452NAC_DC03/00A

UNLESS OTHERWISE SPECIFIED, DIMENSIONAL TOLERANCES ARE: IN [mm]

.X ± .XXX ±

.XX ± ANGLES ±

THIRD ANGLE PROJECTION

MATERIAL: FACEPLATE: ABS
MOUNTING PLATE: C.R.S.

DRAWING NUMBER: 00452NAC-DC03

DRAWN BY	DATE	CHK	SCALE	SHT 1 OF 1	SIZE
BJN	11-30-17	ROJC	NONE		A

D1010ODA/14