RoHS 2015/863/EU REACH compliant Conflict minerals free

GEYER quartz technology

Tuning Fork Crystal

SMD-version

part no.	12.87148
model	KX–327NHT
frequency	32.768 kHz
operating temperature	-40° ~ +85°C
frequency tolerance at +25°C	±20 ppm
temperature tolerance (parabolic coefficient	-0.035 ppm/°C^2 typ.
turnover temperature	+25°C ±5°C
storage temperature range	-55°C ~ +125°C
load capacitance C_L	7 pF
motional capacitance (C1)	0.0036 pF, typ.
series resistance R1 max.	50k Ohm
aging at +25°C (first year) max.	±3 ppm
shunt capacitance C_O	1.3 pF (1,0 pF typ.)
drive level	1.0 µW max., 0.1 typ.
quality factor (Q) min.	20000
reflow soldering condition max.	10 seconds at +260°C (2 times)
contents of reel	3000 pcs.

Dimensions (mm):

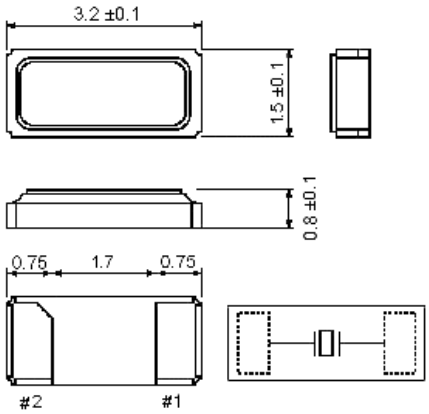

Reflow soldering condition:

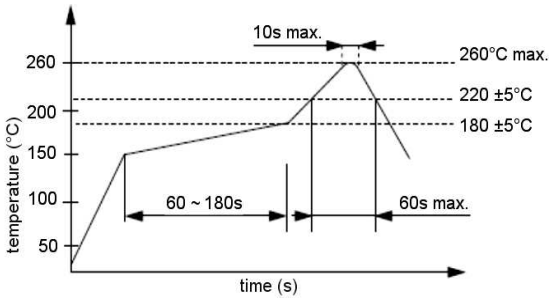

Suggested soldering pad:

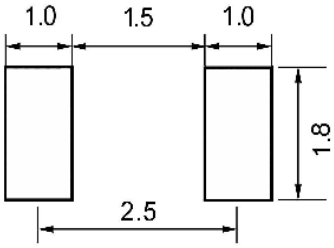

Tape specification:

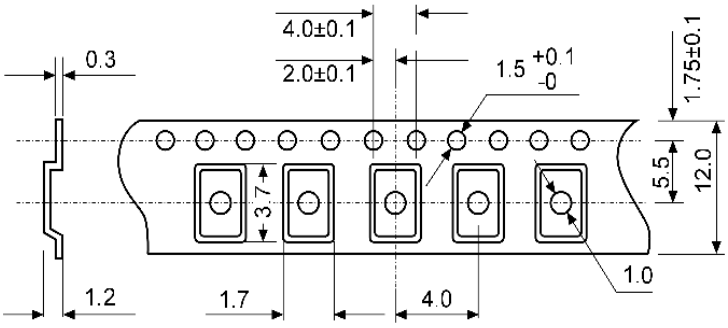

reel diameter 180 mm

GEYER ELECTRONIC e.K. Lochhamer Schlag 5 82166 Gräfelfing/München
Tel. +49 89 546868-0 quartz@geyer-electronic.de www.geyer-electronic.de