THIS DRAWING IS UNPUBLISHED. RELEASED FOR PUBLICATION 20
© COPYRIGHT 20 BY TYCO ELECTRONICS CORPORATION. ALL RIGHTS RESERVED.

PART NUMBER	REV	FIRST USED	POWER UNIT	FEED TYPE	DESCRIPTION
1855244-1	A	122500-1	LEADMAKER	AIR FEED	CUTS CARRIER
1855244-2	A	565435-5	BENCH MODEL K	AIR FEED	CUTS CARRIER
1855244-3	A	354500-1	BENCH MODEL G	AIR FEED	CUTS CARRIER
7-1855244-7	A	-	-	-	SPARE PARTS

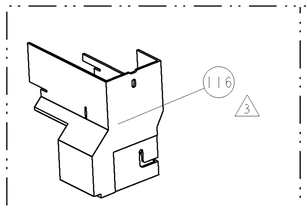

AMP-O-LECTRIC TERM GUARD

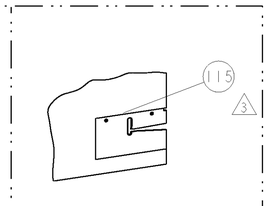

G TERMINATOR GUARD

TERMINAL NAME: MEDIUM RING TERMINAL

TYCO PN	MANUF PN	PACKARD TERM - PACKARD CRIMP SPECS			
194921 1-1	12103506				
1949236-1	12162099		CRIMP HEIGHT	WIRE SIZE	REF SETTING
-	-		2.60±0.05mm[.102±.002]	3mm2	B9
-	-		2.45±0.05mm[.097±.002]	2mm2	C6
-	-		-	-	-
-	-		-	-	-
-	-	CRIMP	SIZE	TYPE	RANGE
-	-	WIRE	4.19mm [.165]	F	2.00-3.00 mm2
-	-	INSUL	5.00mm [.197]	F	Ø3.7 mm MAX
WIRE STRIP LENGTH 8.1mm	TERM APPL SPEC NONE	FEED 19.86mm	APPLICATOR INSTRUCTIONS 408-8040		SET UP GAGE 458637-1

LOC	DIST
A	66

REVISIONS

P	LTR	DESCRIPTION	DATE	DWN	APVD
	A	RELEASED	24APR2007	BH	BH

1 RECOMMENDED SPARE PARTS

2 GREASE LIGHTLY

3 GUARD MUST BE IN PLACE WHEN OPERATING APPLICATOR IN A BENCH MACHINE

4 INSTALL ITEMS 102 & 119 ON SIDE OF STRIPPER ON APPL HOUSING USING ITEM 21.

* WARNING

ON INSTALLATION, SET WIRE DISC TO LARGEST WIRE SIZE SETTING. USE OF SETTINGS BELOW MIN. REQUIRED CRIMP HEIGHT SETTING WILL CAUSE DAMAGE TO CRIMP TOOLING.

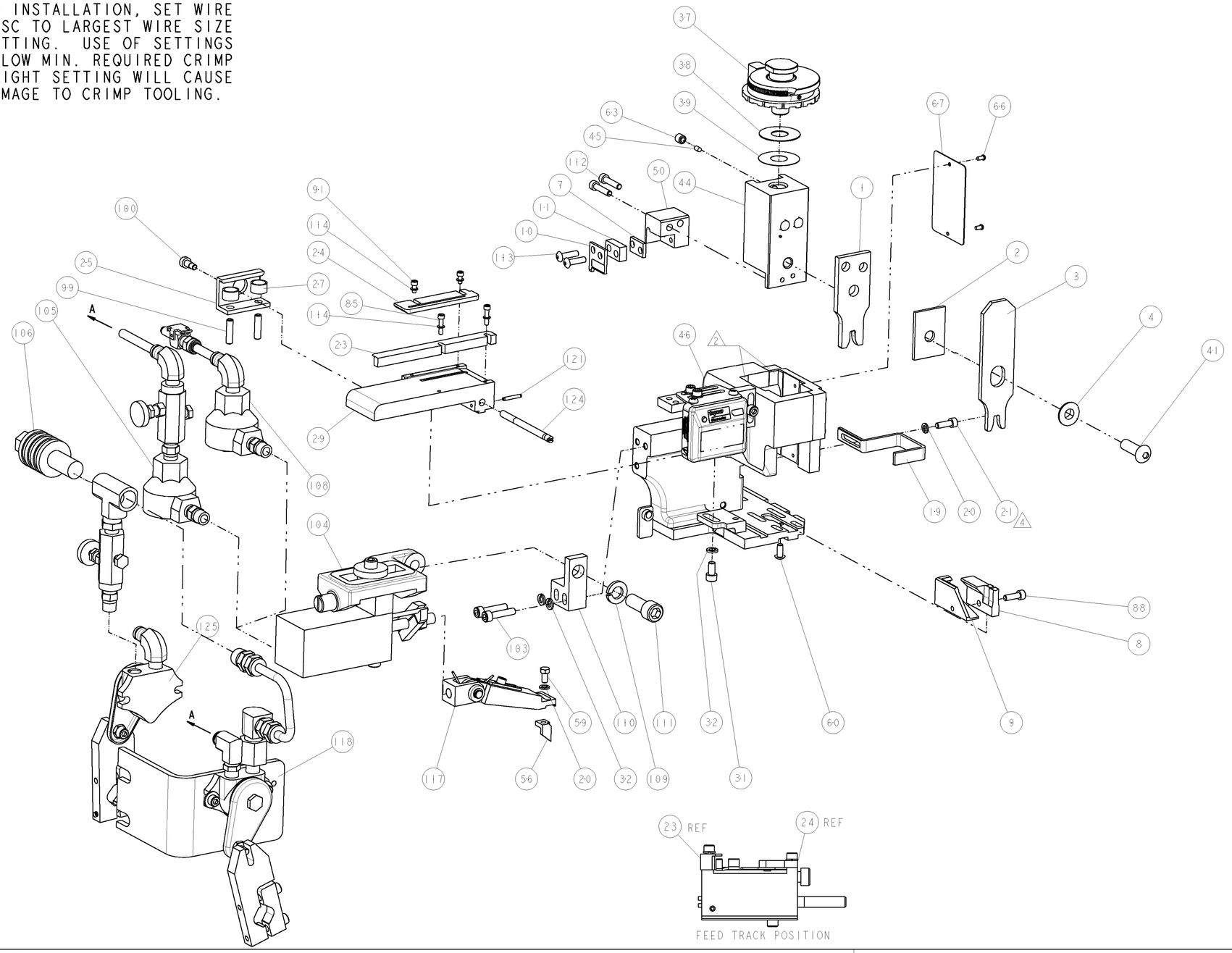

-77	-3	-2	-1	U/M	PART NO	DESCRIPTION	ITEM NO
-	-	1	-	-	455350-4	AIR BLAST ASS'Y	125
-	1	1	1	-	690432-3	ADJUSTMENT SCREW	124
-	1	1	1	-	3-21028-8	PIN, SLOTTED SPRING .094 X .625	121
4 -	18	24	18	IN	27319-4	TUBING, POLY-FLO, NATURAL	119
-	-	1	-	-	692655-6	AIR FEED VALVE ASSEMBLY	118
-	1	1	1	-	461062-1	FEED FINGER ASSEMBLY	117
3 -	-	REF	-	..	455749-1	GUARD WINDOW	116
3 -	REF	-	-	..	679532-1	INSERT, GUARD	115
-	4	4	4	-	21024-2	WASHER, SPRG LOCK, REG NO 4	114
-	2	2	2	-	2-21002-3	SCR, BTN SKT HD CAP 8-32 X .625	113
-	2	2	2	-	2-21000-9	SCR, SKT HD CAP 8-32 X .750	112
-	1	1	1	-	3-21001-5	SCR, SKT HD CAP 3/8-16 X 1.000	111
-	1	1	1	-	459610-1	MOUNT, FEED BRACKET	110
-	1	1	1	-	21024-8	WASHER, SPRG LOCK, REG 3/8	109
-	1	-	1	-	692655-7	AIR FEED VALVE ASSEMBLY	108
-	-	1	-	-	24042-2	VALVE, SLEEVE, 3-WAY	106
-	-	1	-	-	692655-5	AIR FEED VALVE ASSEMBLY	105
-	1	1	1	-	461065-1	ASSEMBLY, AIR FEED	104
-	2	2	2	-	3-21000-8	SCR, SKT HD CAP 10-32 X .875	103
4 -	1	1	1	-	986220-1	CLAMP, CABLE, BLACK	102
-	1	-	1	-	23238-1	INSERT, COUPLING	101
-	1	1	1	-	22353-8	SCR, SHLD, SLOT HD, 3/16 DIA	100
-	2	2	2	-	5-21006-6	SCR, SET, CUP POINT 10-32 X .750	99
-	2	2	2	-	1-21000-3	SCR, SKT HD CAP 4-40 X .250	91
-	1	1	1	-	2-21000-7	SCR, SKT HD CAP 8-32 X .500	88
-	2	2	2	-	1-21000-5	SCR, SKT HD CAP 4-40 X .500	85
-	1	1	1	-	4088040	SF APPL INST 408-8040	72
-	1	1	1	-	217238-1	GENERAL INSTRUCTION PKG	71
-	1	1	1	-	461264-5	PLATE, IDENTIFICATION	67
-	2	2	2	-	21017-2	SCREW, DRIVE	66
-	1	1	1	-	21009-2	SCR, SET, SELF LOCKING 1/4-20 X .250	63
-	1	1	1	-	22733-8	SCR, BHSC, SELF-LOCKING, 8-32 X .375	60
-	1	1	1	-	2-22603-0	SCR, HEX HD CAP 8-32 X .312	59
-	1	1	1	-	2-694433-8	FEED PAWL	56
-	1	1	1	-	1633513-2	HOLDER, SLUG BLADE	50
-	1	1	1	-	1633399-1	APPL., BASIC AIR FEED SUB ASSY	46
-	1	1	1	-	690191-1	PLUG,NYLON	45
-	1	1	1	-	455673-6	RAM, SIDE FEED	44
-	1	1	1	-	7-21002-9	SCR, BTN SKT HD CAP 5/16-24 X 1.00	41
-	1	1	1	-	690125-1	SHIM SUB-ASSY	39
-	1	1	1	-	1-469367-2	SHIM	38
-	1	1	1	-	879103-3	FINE ADJUST HEAD ASSEMBLY	37
-	3	3	3	-	21024-5	WASHER, SPRG LOCK, REG NO 10	32
-	1	1	1	-	3-21000-4	SCR, SKT HD CAP 10-32 X .375	31
-	1	1	1	-	3-844048-1	PLATE, REAR STRIP GUIDE	29
-	2	2	2	-	22284-1	SPRING, COMPRESSION	27
-	1	1	1	-	356835-1	LEVER, DRAG RELEASE	26
-	1	1	1	-	240792-1	DRAG, TERMINAL	25
-	1	1	1	-	1633497-2	REAR STRIP GUIDE	24
-	1	1	1	-	2-189124-1	GUIDE, FRONT STRIP	23
-	1	1	1	-	2-21000-7	SCR, SKT HD CAP 8-32 X .500	21
-	2	2	2	-	21024-4	WASHER, SPRG LOCK, REG NO 8	20
-	1	1	1	-	1-458230-8	STRIPPER	19
-	1	1	1	-	8-240641-8	SPACER	11
1 -	1	1	1	-	1633512-3	BLADE, SLUG	10
1 -	1	1	1	-	1-1633124-0	PLATE, REAR SHEAR	9
1 1	1	1	1	-	1633507-7	ANVIL, SPECIAL, COMBINATION	8
-	1	1	1	-	8-240641-6	SPACER	7
-	1	1	1	-	1-238009-1	BLOCK, FL CRIMPER SPACER	4
1 1	1	1	1	-	4-1633471-4	CRIMPER, INSULATION F	3
-	1	1	1	-	2-455888-1	SPACER, CRIMPER	2
1 1	1	1	1	-	6-1673600-9	CRIMPER, WIRE	1

THIS DRAWING IS A CONTROLLED DOCUMENT FOR TYCO ELECTRONICS CORPORATION. IT IS SUBJECT TO CHANGE AND THE CONTROLLING ENGINEERING ORGANIZATION SHOULD BE CONTACTED FOR THE LATEST REVISION.

DIMENSIONS: INCHES

TOLERANCES UNLESS OTHERWISE SPECIFIED:
0 PLC ±-
1 PLC ±0.1
2 PLC ±0.01
3 PLC ±0.001
4 PLC ±0.0001
ANGLES ±-

MATERIAL - -
FINISH - -

DWN B.HIGMAN 23MAR2007
CHK B.HIGMAN 23MAR2007
APVD T. BENCHOFF 23MAR2007

PRODUCT SPEC -
APPLICATION SPEC -
WEIGHT -

tyco Electronics — Tyco Electronics, Harrisburg, PA 17105-3608

NAME: FINE ADJUST SIDE FEED HDM APPLICATOR

SIZE A1 | CAGE CODE 00779 | DRAWING NO C-1855244 | RESTRICTED TO -

CUSTOMER DRAWING | SCALE 3:5 | SHEET 1 OF 1 | REV A

CUSTOMER VIEWABLE ASSEMBLY