FILE NO.	BB-CD-401-02

NOTES:

① MAT'L: COPPER (STOCK TKN. $\frac{.031}{.79}$ ±.001)
PLATING: ELECTRO TIN (.0003 MIN)

② TIN-PLATED BRASS FUNNEL FERRULE

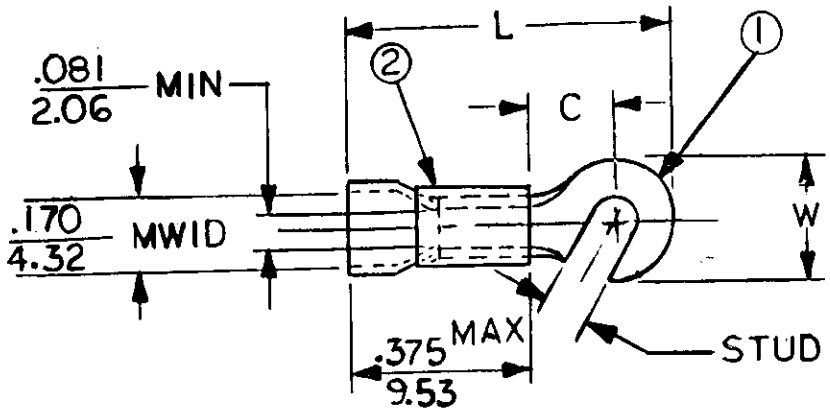

STUD SIZES: (±.005)

02 = .094
04 = .119
06 = .146
08 = .173
10 = .198
14 = .265
56 = .328
38 = .390

"UL" LISTING #E32244
"CSA" LISTING #18689

WIRE SIZE: 16-14 AWG / 1.0-2.5 MM²

ALL DIMENSIONS = INCHES / MM

(MWID) DENOTES MAXIMUM WIRE INSULATION DIAMETER

PART NUMBER	"W" ±.010	"C" MIN.	"L" MAX.				AVAILABLE STUD SIZES	
BB-419-	.350 / 8.89	.271 / 6.88	.872 / 22.15				06, 08, 10	

DIMENSIONAL TOLERANCES UNLESS OTHERWISE SPECIFIED			REFERENCE	SCALE: NTS	DATE	TITLE:
FRAC.	DEC.	ANG.		DRWN. BY: JJ	11·21·84	HOOK TONGUE TERMINAL VIBRAKRIMP 400-SERIES
±	±	±		CHKD. BY: GZ	12·4·84	
				APPRD. BY:		

ETC molex INCORPORATED

DWG. NO. A CUSTOMER DWG