DO NOT SCALE	METRIC	THIRD ANGLE PROJECTION
DIMENSIONS IN mm		

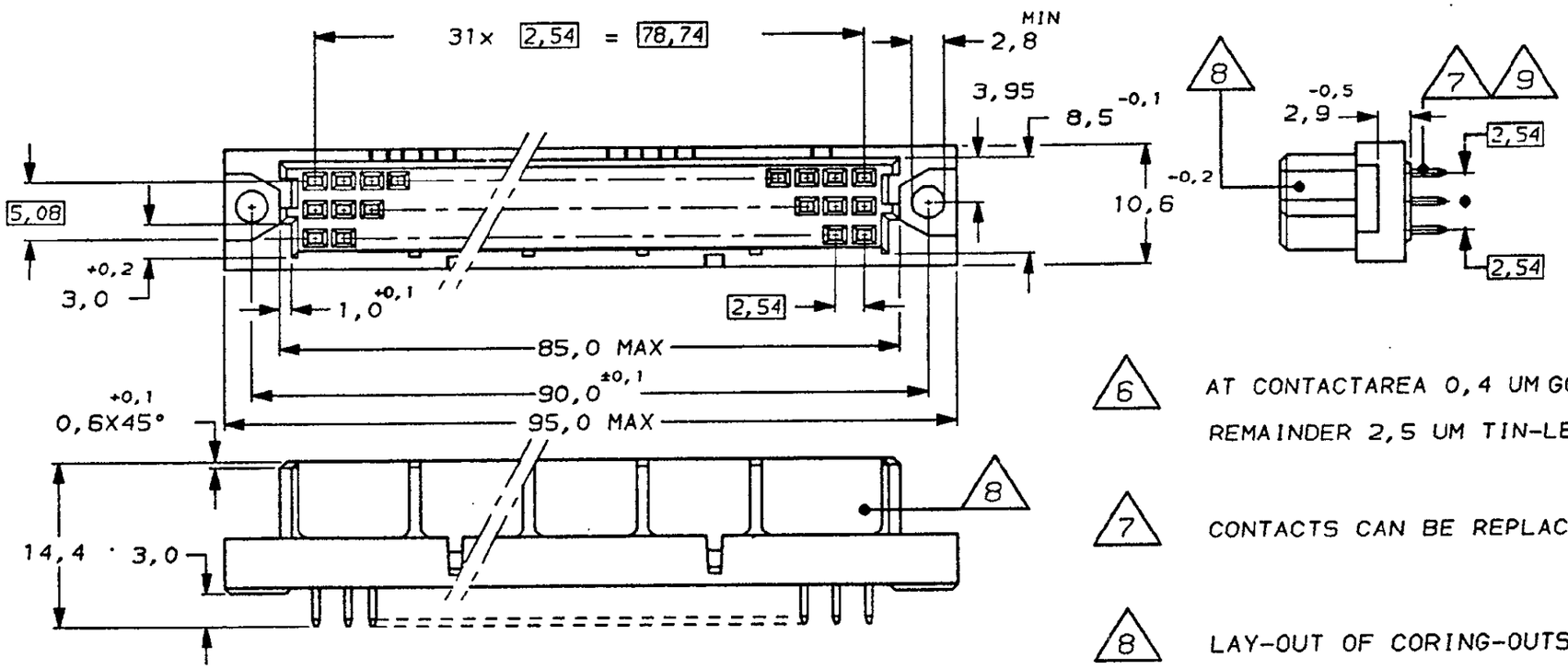

6 AT CONTACTAREA 0,4 UM GOLD OVER 1,25 UM NICKEL.
REMAINDER 2,5 UM TIN-LEAD (93/7).

7 CONTACTS CAN BE REPLACED AFTER ASSEMBLING.

8 LAY-OUT OF CORING-OUTS OPTIONAL.

9 B.T.B. POST SUITABLE. FOR 1,0 ±0,1 MM. DIA HOLE
P.C.B. THICKNESS 1,6 MM.

10 OBSOLETE PARTS: OBSOLETE CIS STREAMLINING PER D.RENAUD/D.SINISI

NOTES:

1 CONNECTOR MEETS THE REQUIREMENTS
ACC. DIN 41612 AND IEC 603-2 SPECIFICATION.

2 MATERIAL CONTACT: PHOSPHORBRONZE.
MATERIAL COVER: GLASSFILLED 30% THERM. POLYESTER.
COLOR GREY ACC: RAL 7032.

3 AT CONTACTAREA 1,25 UM GOLD OVER 1,25 UM NICKEL.
REMAINDER 2,5 UM TIN-LEAD (93/7).

4 AT CONTACTAREA 0,8 UM GOLD OVER 1,25 UM NICKEL.
REMAINDER 2,5 UM TIN-LEAD (93/7).

5 AT CONTACTAREA 2,0 UM GOLD OVER 1,25 UM NICKEL.
REMAINDER 2,5 UM TIN-LEAD (93/7).

	FINISH	MATERIAL	PART NUMBER
10 OBSOLETE	6		-8
	5		-7
	4		-4
	3	2	166 584 - 1

CUSTOMER DWG
for REFERENCE ONLY

ISS	REVISION RECORD	ECN	DR/CHK	DATE
B2	REV PER ECO-10-000444		KK/AEG	08JAN10
B1	REDRAWN BY EC: LB-	0681/94	E.LOPES	13.DEC.94

THIS DRAWING IS ~~UNDER CONTROL~~ LIMITED | RELEASED FOR PUBLICATION 19 .

© COPYRIGHT 19 BY AMP DO BRASIL LTDA S.P. ALL INTERNATIONAL RIGHTS RESERVED. AMP PRODUCTS MAY BE COVERED BY U.S. AND FOREIGN PATENTS AND/OR PATENTS PENDING.

TOLERANCES UNLESS OTHERWISE STATED
DEC. ± 0,3
ANGLES ± 1°

INS. DIA. RANGE ——— " ——— | WIRE RANGE ——— " ——— | SCALE ——— " ———

DR. E.LOPES 13.DEC.94
CHK. M.RUSSO 14/DEC/94
DE
APP M.E.DINIZ 14/DEC/94

AMP
AMP do BRASIL LTDA.
São Paulo, Brasil

DESCRIPTION
96 POS FEMALE CONN.ASS'Y
WITH B.T.B., CONTACTS.

A3 | DWG NO C-166584. | SHEET 1 of 1