ITEM	COMPONENT	QTY	MATERIAL
1	HOUSING	1	POLYESTER (PBT). 30% GLASS FILL, UL-94 V-0 COLOUR BLACK.
2	TERMINAL	1	PHOSPHOR BRONZE, Au IN CONTACT AREA.

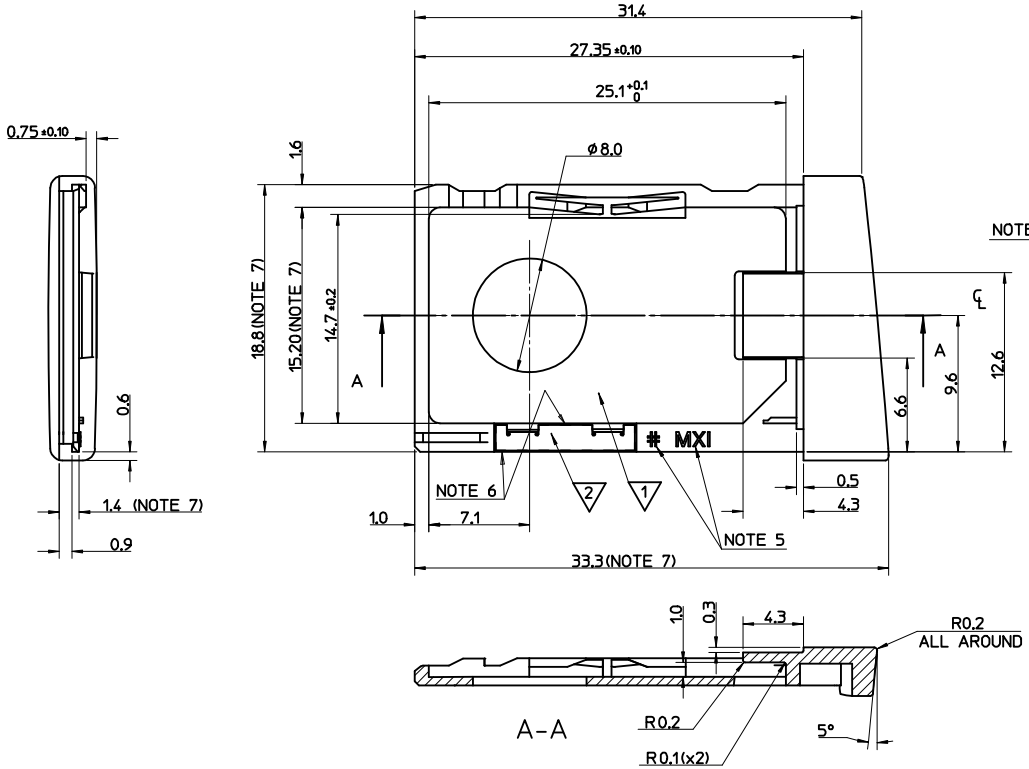

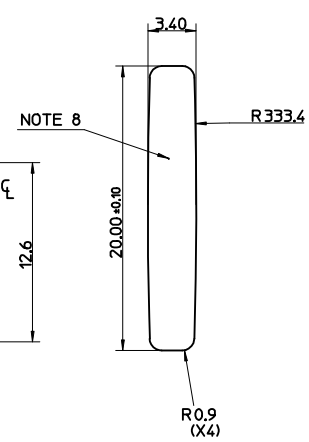

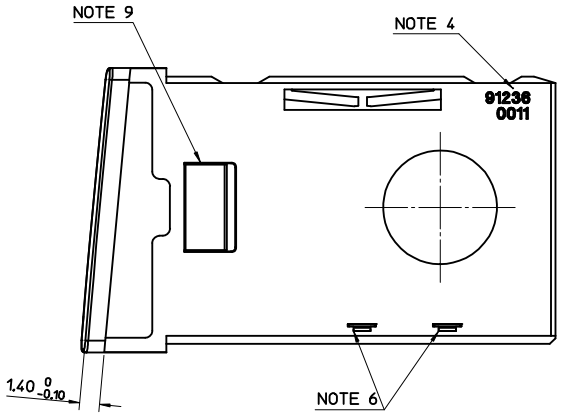

NOTES:

1. PROTRUSION OF BRIDGE TERMINAL FROM HOUSING IS 0.08 MAX.
2. SEE PRODUCT SPECIFICATION PS-99020-0071.
3. PACKAGING LOOSE IN BAG.
4. PART I.D. TO BE 0.8 HIGH & RELIEVED 0.1 BELOW SURFACE.
5. MOLEX LOGO 'MXI' & CAVITY NUMBER '#' TO BE 1.0 HIGH & RAISED 0.1 MAX.
6. BRIDGE TERMINAL MUST NOT PROTRUDE BEYOND EDGES SHOWN.
7. APPLICABLE DIMENSIONS FOR PROCESS CAPABILITY STUDY.
8. SURFACE FINISH: CHARMILLE 27.
9. UNSPECIFIED DRAFT 5°

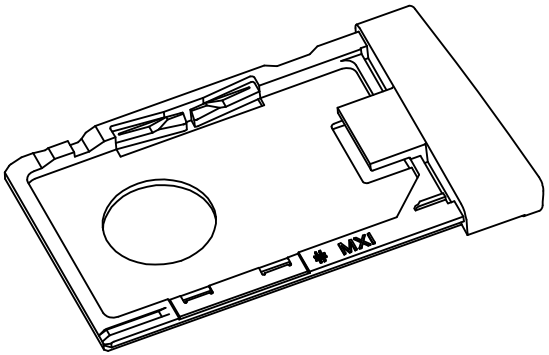

ORIGINAL RELEASE
EC NO: E2003-0280
DRWN: DCARTON 2002/12/11
CH'KD: 2002/12/13
APPR: MWILHITE 2002/12/16
REV: A
DESCRIPTION

QUALITY SYMBOLS
▼ - 0
(C) - 0

GENERAL TOLERANCES (UNLESS SPECIFIED)

	mm	INCH
4 PLACES	± ---	± ---
3 PLACES	± ---	± ---
2 PLACES	± 0.10	± ---
1 PLACE	± 0.2	± ---
ANGULAR ± 3 °		

DRAFT WHERE APPLICABLE MUST REMAIN WITHIN DIMENSIONS

SCALE 4:1 | DESIGN UNITS METRIC | THIRD ANGLE PROJECTION | REVISE ON CAD ONLY
DIMENSION STYLE MM ONLY
TITLE CARD HOLDER
DRAWN BY FDUGGAN DATE 2002/09/05
CHECKED BY EFOLAN DATE 2002/09/05
APPROVED BY MWILHITE DATE 2002/09/05
molex MOLEX INCORPORATED
MATERIAL NO. 912360011
DOCUMENT NO. SD-91236-009
SHEET NO. 1 OF 1

THIS DRAWING CONTAINS INFORMATION THAT IS PROPRIETARY TO MOLEX INCORPORATED AND SHOULD NOT BE USED WITHOUT WRITTEN PERMISSION

A2