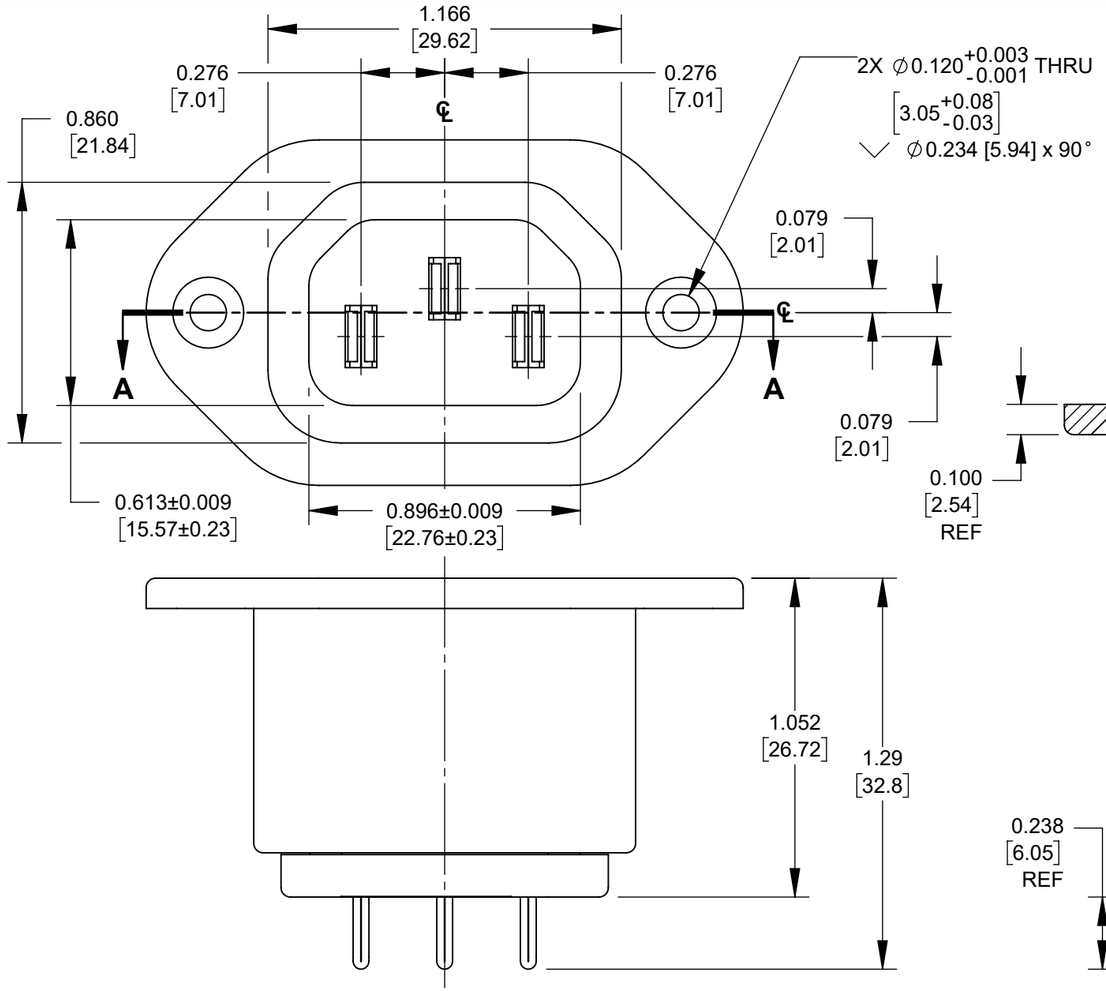

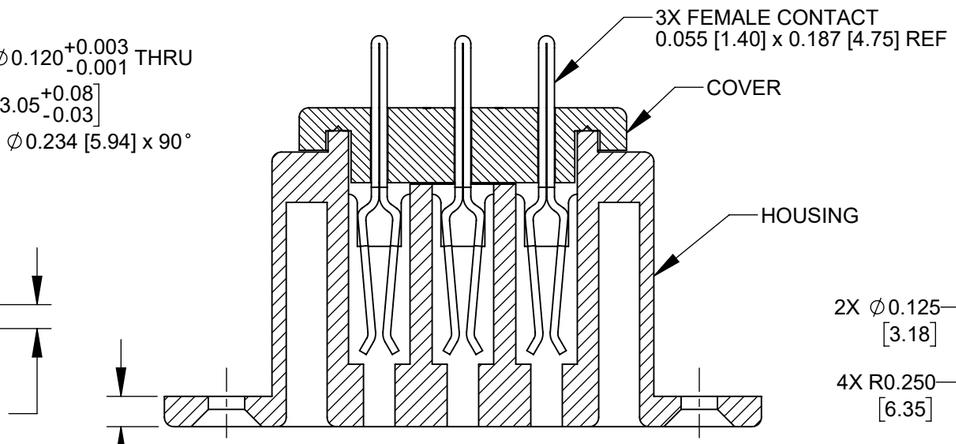

SECTION A-A

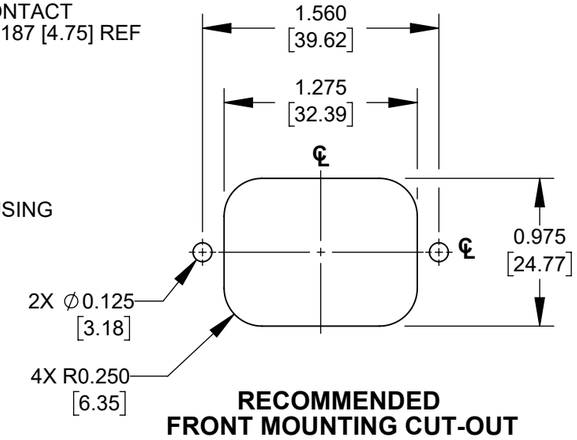

RECOMMENDED FRONT MOUNTING CUT-OUT

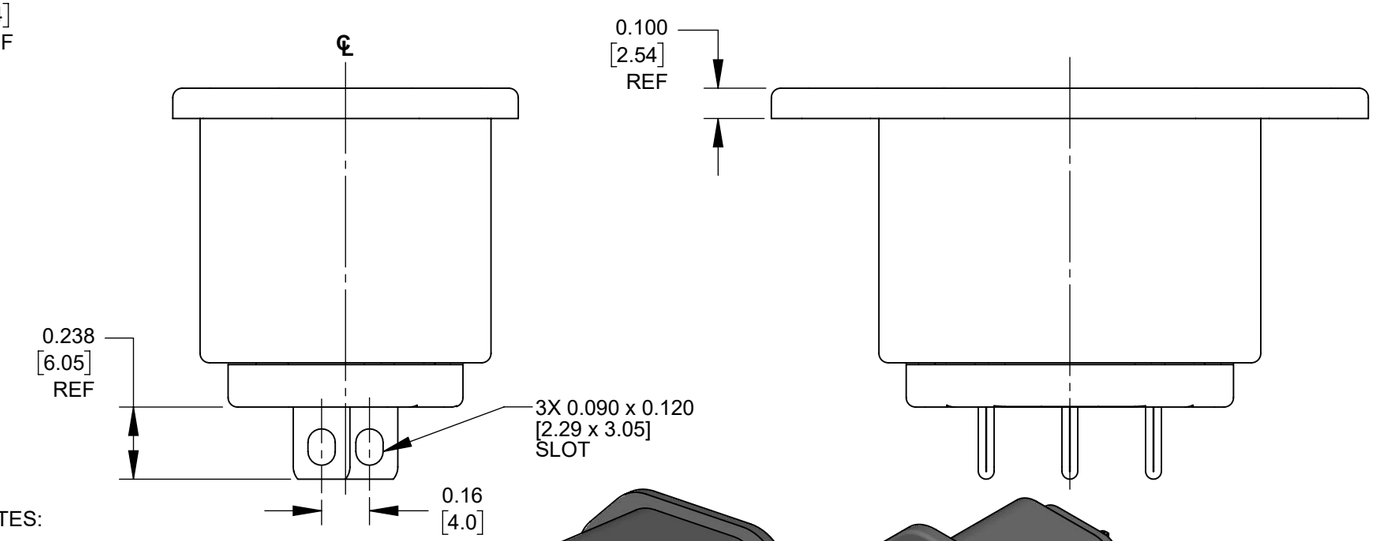

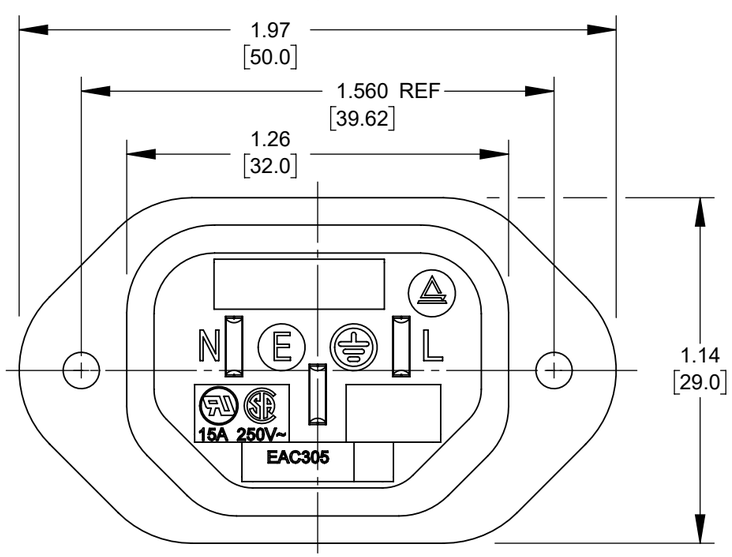

NOTES:

1. MEETS IEC 60320 SPECIFICATION.

(J) 2. AGENCY APPROVAL & RATING:
UL & CSA: 15A, 250V~ AC.

(H) 3. MATERIALS:
HOUSING AND COVER, BLACK THERMOPLASTIC.
TERMINALS, TIN PLATED COPPER ALLOY.

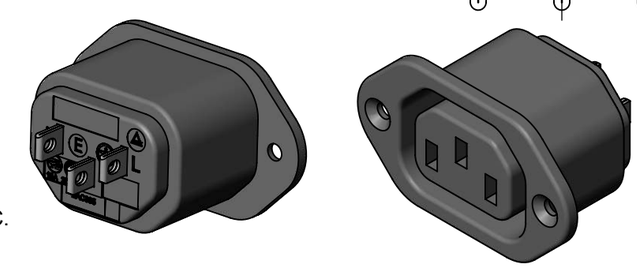

CUSTOMER DRAWING

REV	ECO NUMBER	DATE	BY	APVD
J	28549	01/16/23	PC	TJK
H	27335	07/30/14	PC	TJK
G	26912	02/16/12	BL	TJK
F	24129	03/27/02	BL	TJK

REVISIONS

UNLESS OTHERWISE SPECIFIED

1. ALL DIMENSIONS IN INCHES [mm]
- TWO PLACE DECIMALS ±0.02 [0.5]
- THREE PLACE DECIMALS ±0.005 [0.13]

DO NOT SCALE DRAWING

THIS DRAWING DESCRIBES A DESIGN CONSIDERED PROPRIETARY IN NATURE, DEVELOPED AND MANUFACTURED BY SWITCHCRAFT INC. AND IS RELEASED ON A CONFIDENTIAL BASIS FOR IDENTIFICATION PURPOSES ONLY.

SIZE	WIDTH	MULT	LBS/M	TEMPER

FINISH
SPEC No.

MATERIAL
SPEC No.

FIRST USED ON

SCALE 2:1

DATE DRAWN	BY	CHKD	APVD
07/14/77	CJ	AM 01/04/85	R V 01/04/85

Switchcraft®

SHEET 1 OF 1

NAME
RECEPTACLE FEMALE

PART No.
EAC305

REV
J

SolidWorks CAD File (B)