used for: D-SUB HD

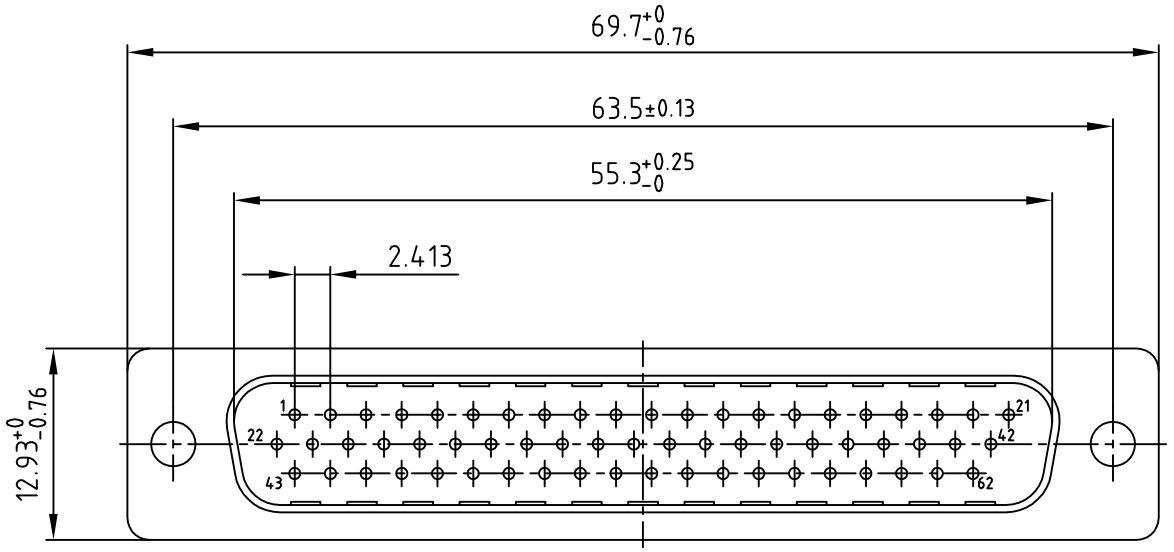

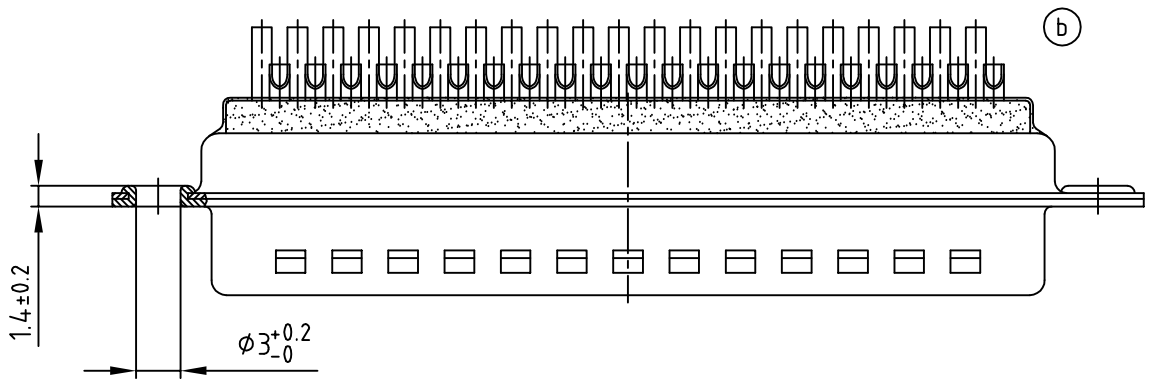

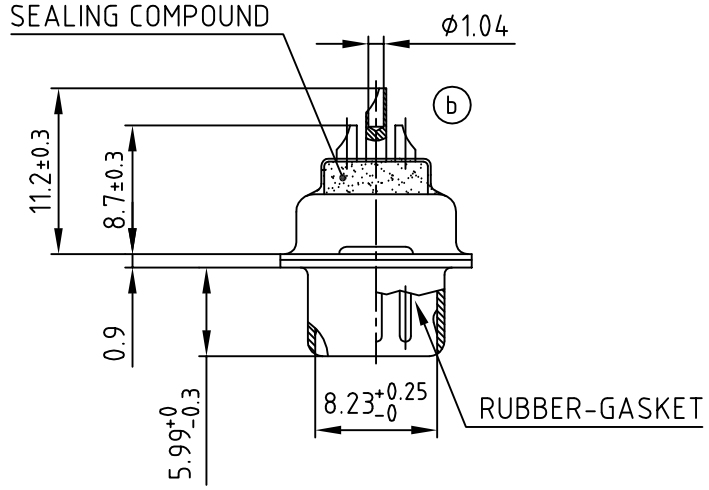

Directive 2002/95/EC RoHS compliant

NOTES:
1. METALSHELLS: COPPER ALLOY; min. 320µin TIN
2. INSULATORS: PBT GF UL 94 V-0, BLACK
3. CONTACTS: COPPER ALLOY
4. PLATING: GOLD FLASH over NICKEL
5. SOLDER CUP ACCEPTS CABLE AWG 22

THIS DRAWING MAY NOT BE COPIED OR REPRODUCED IN ANY WAY, AND MAY NOT BE PASSED ON TO A THIRD PARTY WITHOUT WRITTEN PERMISSION. OWNERSHIP AND COPYRIGHT OF CONEC GmbH
DO NOT ALTER CAD DRAWING BY HAND

rev.	description	date	name
2 x b	Ä3900	11.02.2011	Gitinow
a	Origin		

	date	name
1999		
drawn	02.11.	Barcinski
appd.	02.11.	Mickenbecker
norm		
d-old		

tolerance

scale: 2:1
material: SEE NOTES

title: D-SUB HD MALE
SOLDER CUP 62pos.
for watertight hood

dwg no: 18K1IF4A
CAD/ REL.14
DIN-A 3
sh: 1/1

product no: 4HDD62PAM99A10X