© – TE Connectivity. All Rights Reserved.

| REVISIONS | | | | | |
|---|---|---|---|---|---|
| P | LTR | DESCRIPTION | DATE | DWN | APVD |
| | AB | REV PER ECO 20-007904 | 11-25-20 | CT | DM |

WHEN ORDERING CONTACT ON TAPE, ORDER BY THE TAPE NUMBER PLUS THE PACKAGING CODE AS FOLLOWS:

2. FOR USE WITH AMP TAPETRONIC, PNEUMATIC TOOL–
   A. 1000 PARTS TO A BOX ADD PACKAGING CODE: 1MBOX

3. FOR USE WITH 4/8 INDENT STRIPPER CRIMP–
   A. 1000 PARTS TO A REEL ADD PACKAGING CODE: 1MREEL
   B. 5000 PARTS TO A REEL ADD PACKAGING CODE: 5MREEL

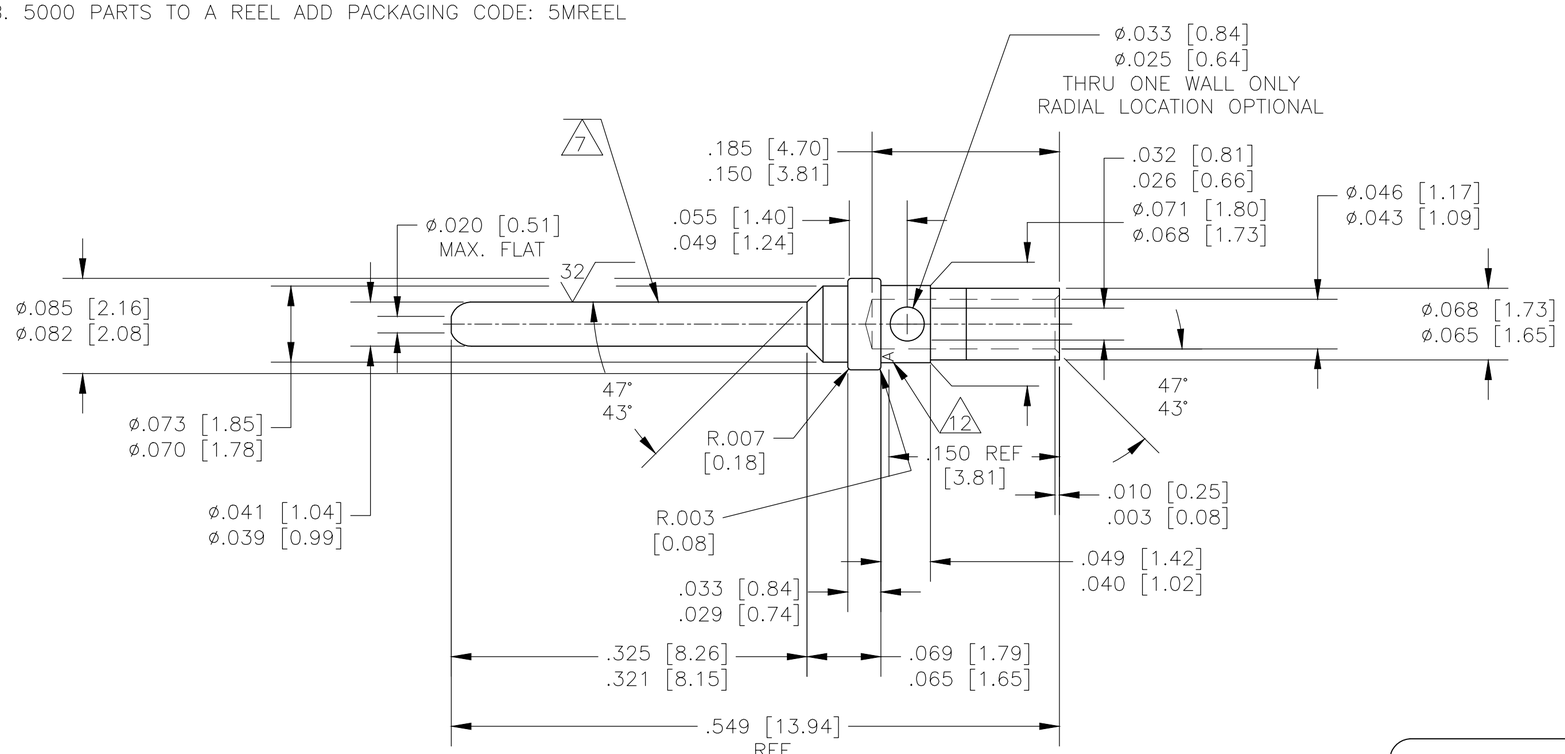


1. MATERIAL: COPPER ALLOY PER MIL–C–39029 & MIL–DTL–24308.
2. ALL DIMENSIONS APPLY AFTER PLATING.
3. ---
4. ALL DIAMETERS CONCENTIC WITH EACH OTHER WITHIN .004 T.I.R.
5. PIN MATES WITH SOCKET 205090 ( AS 39029/63).
6. ALL SURFACES HAVE 63 OR BETTER FINISH, UNLESS SHOWN.
7. POINT OF PLATING MEASUREMENT .188 [4.78] FROM TIP OF PIN.
8. PLATING: GOLD PER ASTM–B–488 (TYPE II) OVER NICKEL PER AMS–QQ–N–290.
9. PLATING: GOLD PER ASTM–B–488 (TYPE II) OVER COPPER PER AMS 2418, .000050 MIN THK.
10. PLATING: GOLD PER ASTM–B–488 (TYPE II, CLASS 0) OVER NICKEL PER AMS–QQ–N–290.
11. PLATING:
    MATING AREA: GOLD PER ASTM–B–488 (TYPE II) OVER NICKEL PER AMS–QQ–N–290.
    NON MATING AREA: GOLD PER ASTM–B–488 OVER NICKEL PER AMS–QQ–N–290.
12. MANUFACTURER'S LOGO ("A" OR "– . .") LOCATION OPTIONAL
13. CONTACTS QUALIFIED TO AS39029/64–369
14. CONTACTS QUALIFIED TO GSFC–S–311–P–4/10, NASA P/N G–10–P1
15. RESTRICTED PART NUMBER.
16. CONTACTS MUST MEET DIMENSIONAL & PERFORMANCE REQUIREMENTS OF GSFC–S–311–P–4/08, NASA P/N G–10–P1 & 100% RESIDUAL MAGNETISM.

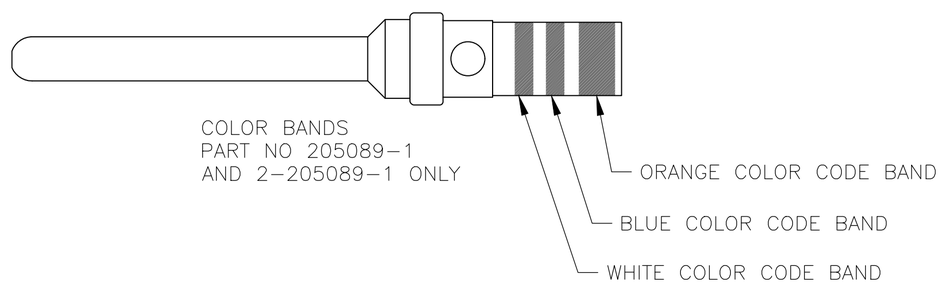


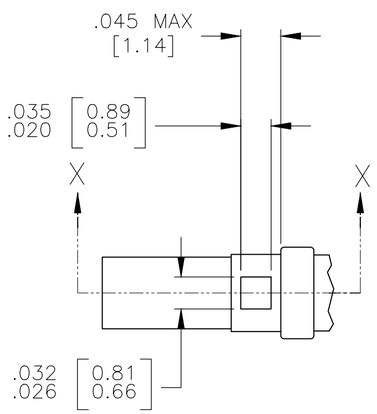


INSPECTION WINDOW OPTIONAL DESIGN 16

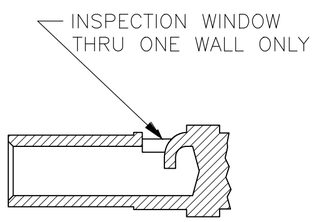


SECTION X—X

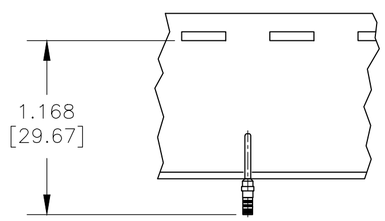


| | DESCRIPTION | PLATING | PART NO. |
|---|---|---|---|
| 16 | WITHOUT COLOR CODE | 9 | 2–205089–6 |
| 15 | | | 2–205089–4 |
| 15 | | | 2–205089–2 |
| 15 | | | 2–205089–1 |
| 13 | WITHOUT COLOR CODE | 8 | 1–205089–1 |
| | WITHOUT COLOR CODE | 10 | 1–205089–0 |
| 14 | WITHOUT COLOR CODE | 9 | 205089–4 |
| 13 | CONTACT ON TAPE | SAME AS –1 | 205089–2 |
| 13 | AS SHOWN | 11 | 205089–1 |

THIS DRAWING IS A CONTROLLED DOCUMENT.

DIMENSIONS: INCHES[mm]

TOLERANCES UNLESS OTHERWISE SPECIFIED:
0 PLC ± –
1 PLC ± –
2 PLC ± –
3 PLC ± –
4 PLC ± –
ANGLES ± –

MATERIAL 1

FINISH –

DWN J. KAISER 25AUG2003
CHK D. MILLER 10–13–03
APVD D. MILLER 10–13–03

PRODUCT SPEC —

APPLICATION SPEC —

WEIGHT 0.000000

CUSTOMER DRAWING

TE Connectivity

NAME PIN SIZE 20 CONTACT, AMPLIMITE

| SIZE | CAGE CODE | DRAWING NO | RESTRICTED TO |
|---|---|---|---|
| A2 | 00779 | C–205089 | — |

SCALE 10:1 SHEET 1 OF 1 REV AB

205089

1471–9 (1/15)