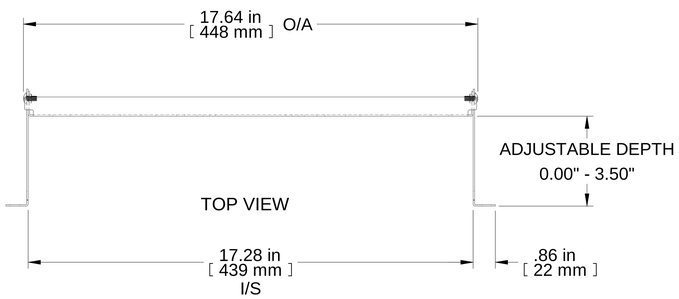

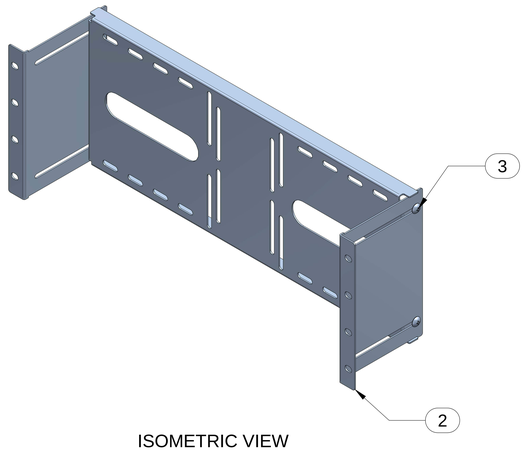

ISOMETRIC VIEW

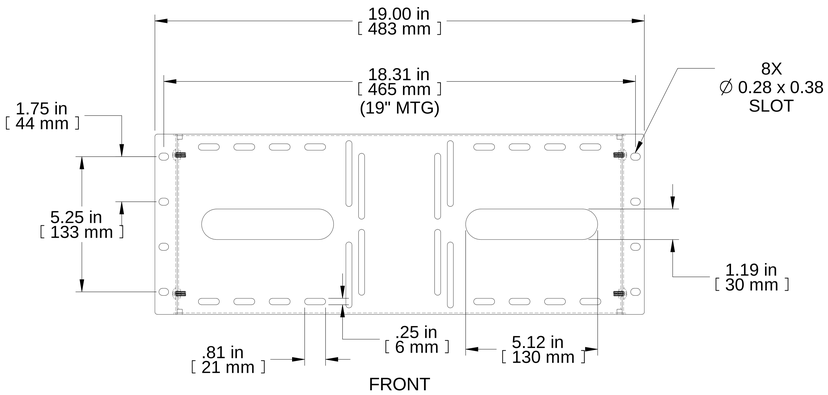

FRONT

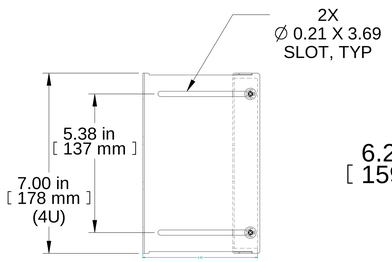

R.S. VIEW

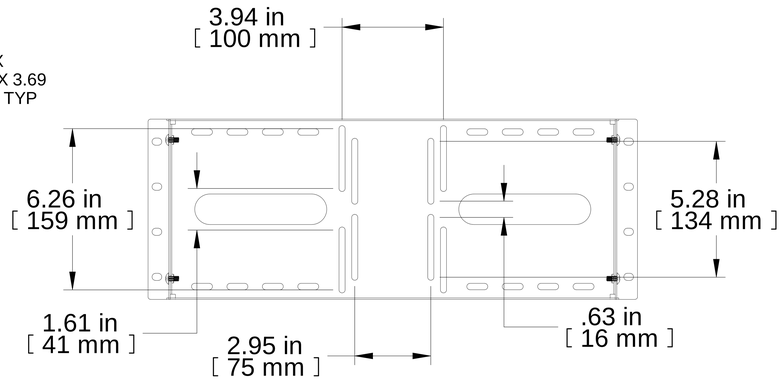

REAR VIEW

Item Number	Title	Quantity
1	AV MONITOR MTG BRKT	1
2	AV SIDE BRKT MOUNT	2
3	SCREW M5 X 10 S.S., PH, TRUSS	4

PART NUMBERS

RB-MMB4	PAINTED BLACK THIN FILM

Includes: 2 Side Mounting Brackets
1 Monitor Mounting Bracket
Rack Mounting Hardware NOT Included
Assembly Hardware Included
See Hammond Website for More Information

Français

Pour tous les détails sur nos produits, svp veuillez consulter notre site www.hammondmfg.com

Data subject to change without notice. Isometric drawing not to scale.
Les données sont sujettes à changement sans préavis.

RACK BASICS®

www.hammondmfg.com

PART NO. **RB-MMB4**