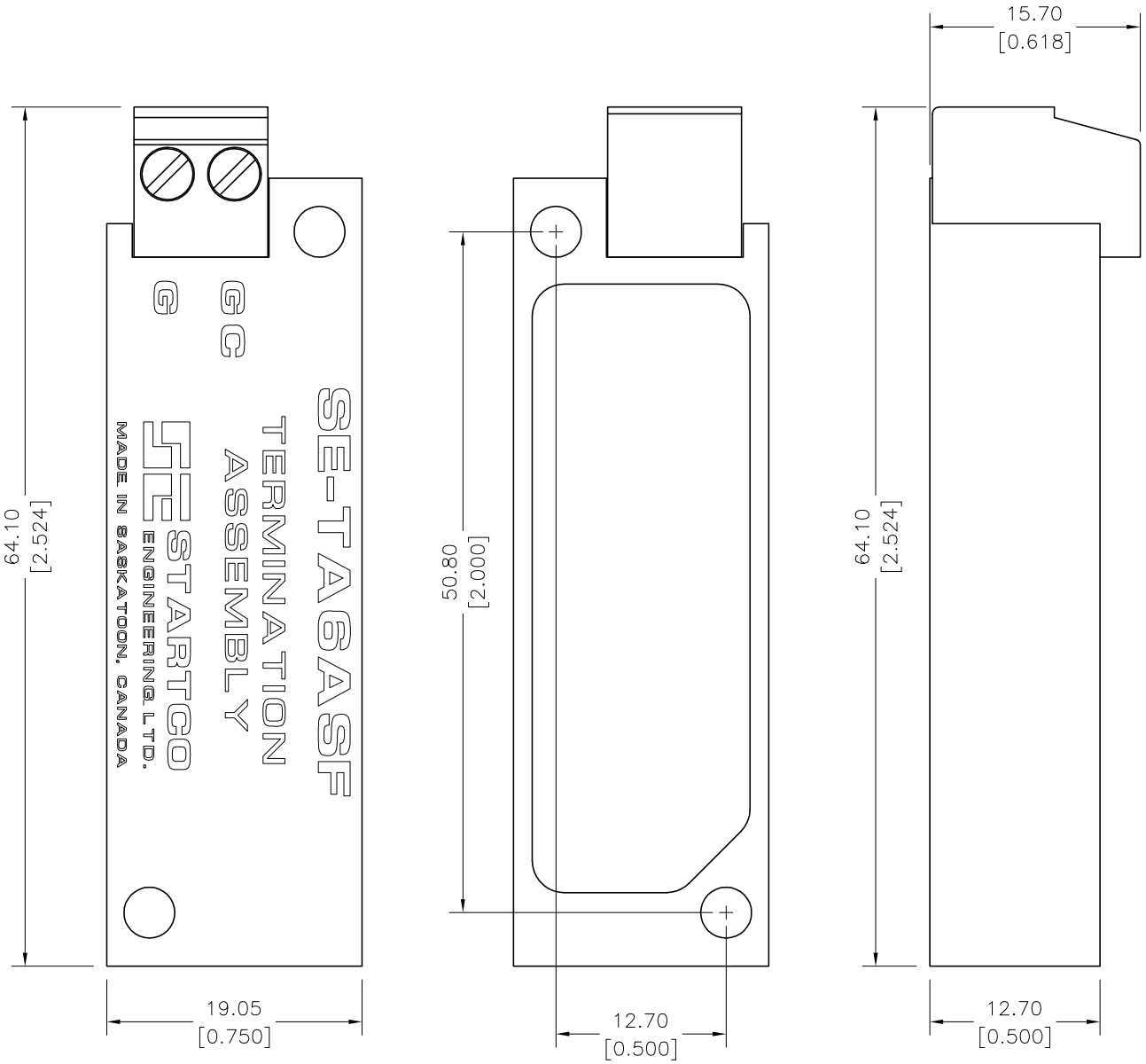

TOP VIEW

BOTTOM VIEW

SIDE VIEW