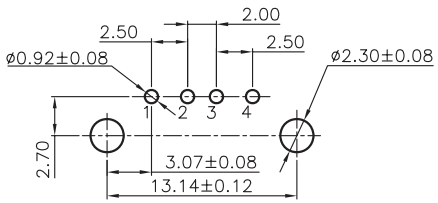

PCB LAYOUT - COMPONENT VIEW

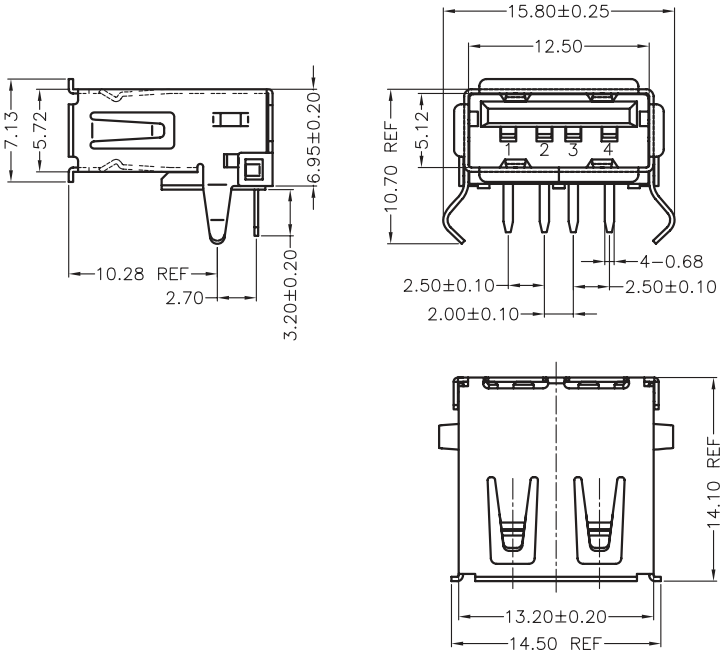

TECHNICAL CHARACTERISTICS

MATERIAL
INSULATOR: PBT
FLAMMABILITY RATING: UL94-V0
COLOR: BLACK
CONTACT MATERIAL: COPPER ALLOY
CONTACT TYPE: STAMPED
CONTACT PLATING: SELECTIVE GOLD
SHIELDING: BRASS NI PLATED
QUALITY CLASS: 1500 MATING CYCLES

ENVIRONMENTAL
OPERATING TEMPERATURE:-40°C UP TO +105°C
COMPLIANCE: LEAD FREE AND ROHS

ELECTRICAL
CURRENT RATING: 1.5 A MAX
WORKING VOLTAGE: 30 VAC
INSULATOR RESISTANCE: >1000 MΩ
DIELECTRIC WITHSTANDING VOLTAGE: 750 VAC/MIN
CONTACT RESISTANCE: 20 mΩ MAX

STANDARD
UL CERTIFIED: E323964

SOLDERING
JEDEC LEAD FREE WAVE SOLDERING

PACKAGING
TRAY

RoHS Compliant

REV	DATE	FILE	BY
A	30-MAR-15	PDF REVIEW	QL

PROJECTION:

GENERAL TOLERANCE
.X = +/- 0.2
.XX = +/- 0.15

APPROVAL: NPr

UNIT: MM
SCALE:
SHEET: 1/2
DRAW: QL

WÜRTH ELEKTRONIK

DESCRIPTION: USB 2.0 FEMALE R/A A TYPE

WERI PART NO: 614 004 160 211

SIZE
A4