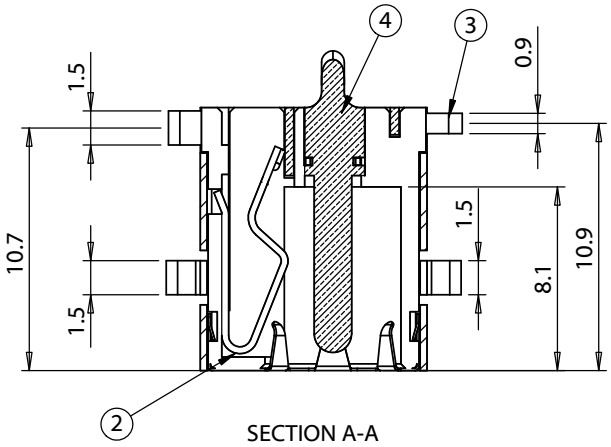


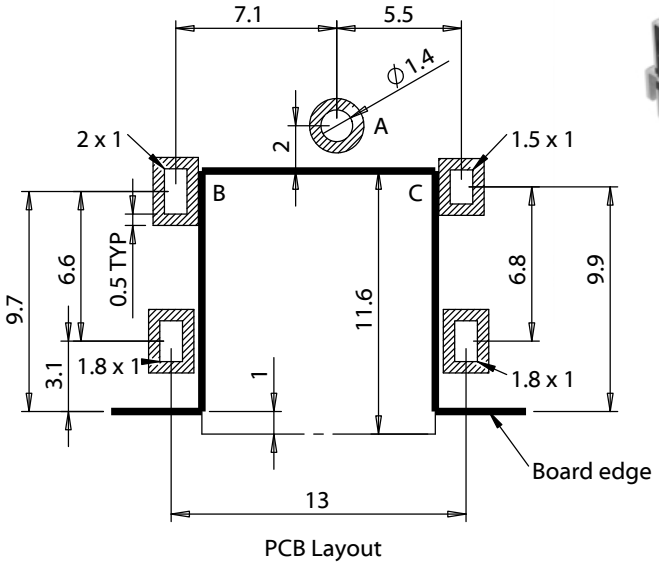


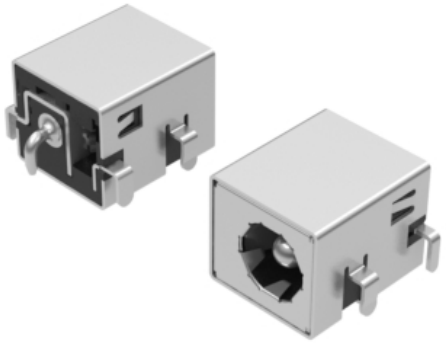

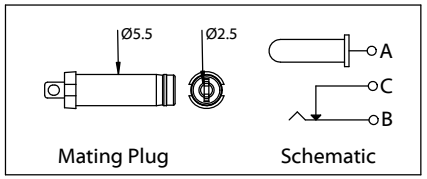


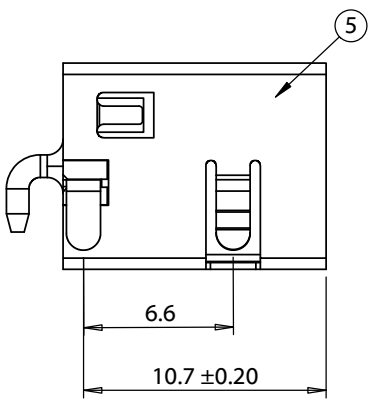


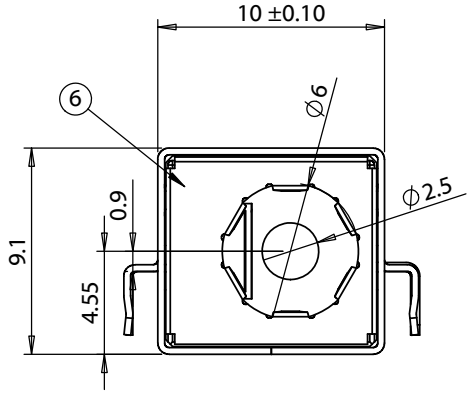


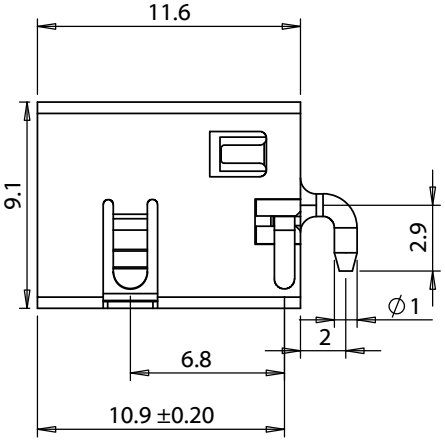


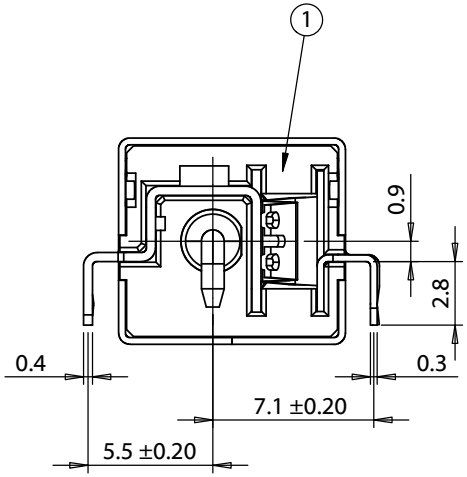


| Revision: | Date: | Description: |
|---|---|---|
| A | 10/1/2020 | Initial release |
| | | |
| | | |
| | | |
| | | |

Prepared: AW — Digitally signed by AW Date: 2020.10.13 13:22:36 -07'00'

Verified: AG — Digitally signed by AG Date: 2020.10.13 15:32:35 -07'00'

Dimensions are in millimeters.
Tolerances:
X: ± 0.5 mm
X.X: ± 0.3 mm
X.XX: ± 0.2 mm

Notes:

RoHS compliant

Function test: no open, no short circuit, no intermittent

Description:

Connector, dc jack 5.5x2.5 mm, PCB mount, 180°, silver plated, LCP, board cut thru hole


TENSILITY

*tel* 1.541.323.3228 *800* 877.670.7118
*fax* 1.541.323.4202 *web* tensility.com


Size: A

Part number: 54-00254

Scale: 3:1

Sheet 1 of 2

5 4 3 2 1

**Ratings**
Maximum operating voltage: 48 V
Maximum operating current: 8 A (not mated under load)

**Operating Temperature Range**
-40 ~ 130 °C, relative humidity of 85% or less

**Materials**
1 Insulator: LCP, black , UL94 V-0
2 Spring contact: C5191 phosphor bronze, silver plated
3 Switch contact: C3604 brass, silver plated
4 Pin: zinc alloy, nickel plated
5 Shell: SPCC, nickel plated
6 Front plate: SUS301

**Electrical Requirements**
Dielectric strength: 1 min @ 500 Vac
Insulation resistance: 100 MΩ @ 250 Vdc
Contact resistance: 30 mΩ or less

**Mechanical Requirements**
Insertion force: 0.5-3 kgf
Withdrawal force: 0.5-3 kgf
Life cycle: 5000 mating cycles while maintaining 30% initial values. withdrawal force and less than 100 mΩ contact resistance.

**Soldering**
Solderability: 90% minimum coverage when terminals dipped 2mm in 260 ±5 °C solder bath for 3 ±0.5 seconds
Solder bath durability: no deformation when immersed in 265 ±5 °C up to surface of the board 1.6 mm for 10 seconds or less
Solder iron durability: no deformation when exposed to 350 ±10 °C for 5 ±0.5 seconds

**Environmental Requirements**
Cold test: -40 ±2 °C for 48 hours without deformation
Heat test: 85 °C for 48 hours without deformation
Humidity test: 40 °C, relative humidity 90-95% for 48 hours without deformation
Salt spray test: 35 °C, relative humidity 90-95%, 5% NaCl mist for 24 hrs. Wash parts after test. Maintain mechanical requirements and a contact resistance of less than 80 mΩ.

**Packaging**
300 pieces/ reel
12 reels/ box

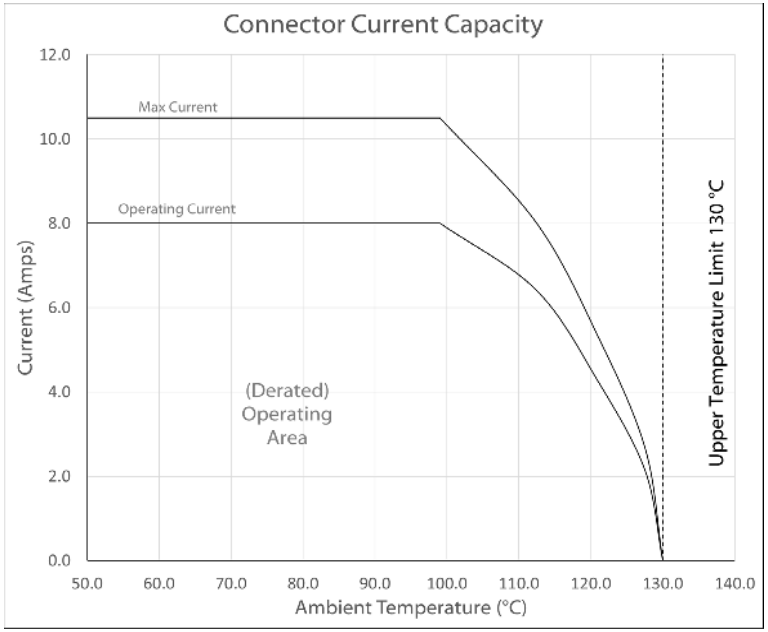


Testing based on IEC 60512-5-2. Max current curve generated with isolated test article under controlled environmental conditions, and does not take into account external factors such as housings,mating cables, or other circuitry. Operating current curve (derated by 20% of maximum values) accounts for external factors, and manufacturing variation.

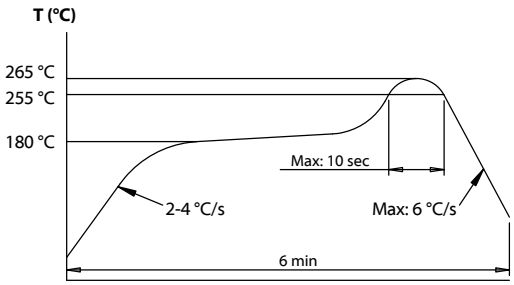


**Reflow soldering temperature profile**

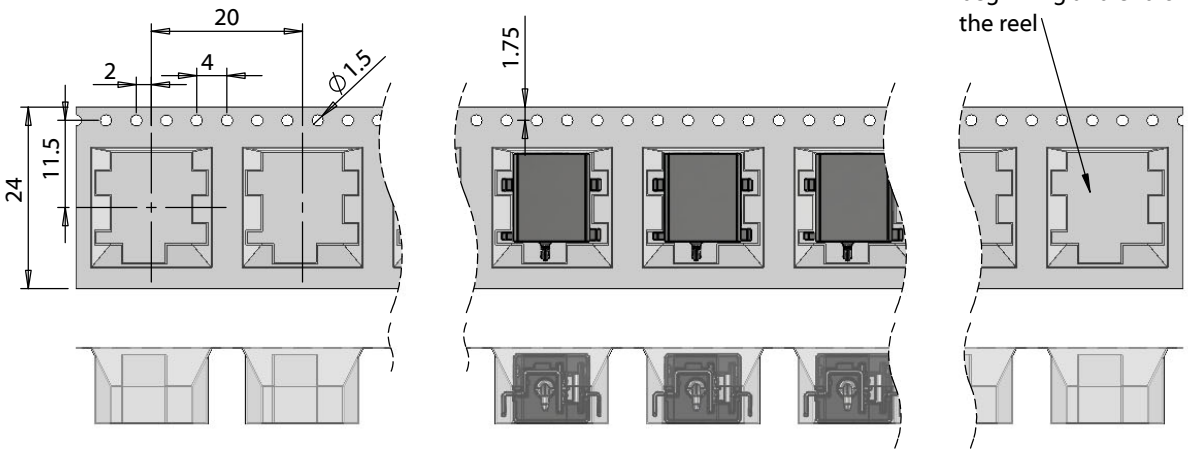


| Revision: | Date: | Description: |
|---|---|---|
| A | 10/1/2020 | Initial release |
| | | |
| | | |
| | | |
| | | |

Prepared: AW Digitally signed by AW Date: 2020.10.13 13:22:47 -07'00'

Verified: AG Digitally signed by AG Date: 2020.10.13 15:32:51 -07'00'

Notes:
RoHS compliant
Function test: no open, no short circuit, no intermittent

Description:
Connector, dc jack 5.5x2.5 mm, PCB mount, 180°, silver plated, LCP, board cut thru hole


TENSILITY
tel 1.541.323.3228 800 877.670.7118
fax 1.541.323.4202 web tensility.com


Size: A
Part number: 54-00254
Scale: 1:1
Sheet 2 of 2

5 4 3 2 1